KOGANEI

Air Valve

SOLENOID VALVES ROUND TYPE SERIES

INSTRUCTION MANUAL Ver.1.0

Charts for Solenoid Valve Selection

1. Air flow rate of each series
(2-, 3-port)

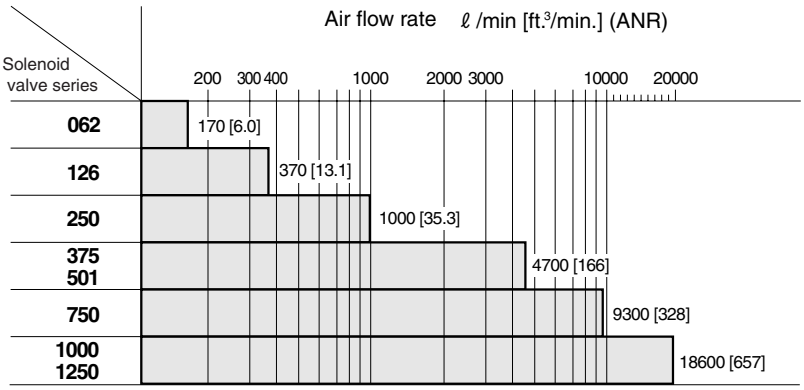

Supply pressure 0.5MPa [73psi.]
When air flows to atmosphere

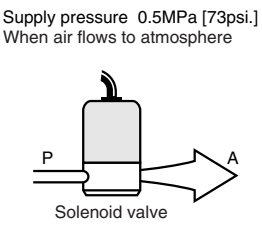

1 ℓ /min = 0.0353ft.³/min.

2. Applicable cylinder bore size of each series
(4-, 5-port)

●Quick-reference graph for applicable cylinders

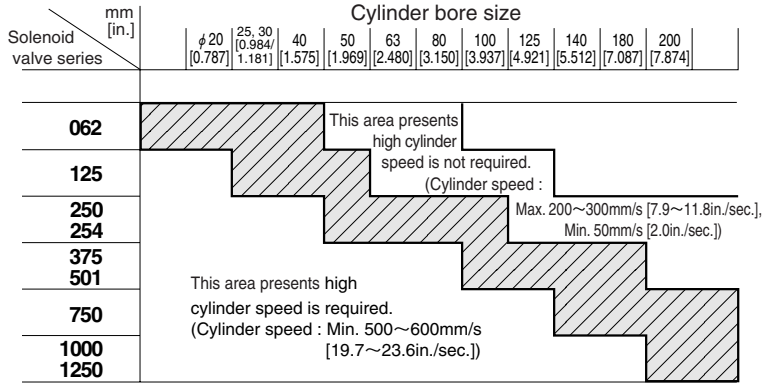

1. The area ▨ of the graph shows the normal range of use. (Cylinder speed 300～600mm/s [11.8～23.6in./sec.])
2. While the graph shows the measured results of an air supply pressure of 0.5MPa [73psi.] and load ratio of 0, the values are virtually identical for the range of 0.4～0.7MPa [58～102psi.] and a load ratio of up to 30%.
3. In general, select a valve with about a 50% margin over the required cylinder speed, and use a speed controller to reduce the speed in actual operation.

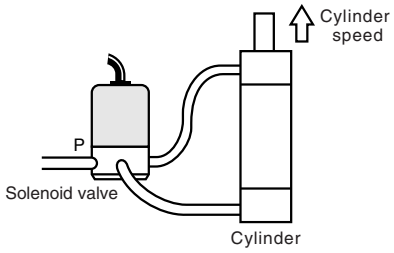

●Cylinder speeds when using each series

The graph at right shows the maximum cylinder speed when operated at a supply pressure of 0.5MPa [73psi.] and a load ratio of 30% or less.

Note: To obtain the time required for 1 stroke, take the "cylinder delay time" and "cushioning time" into consideration.

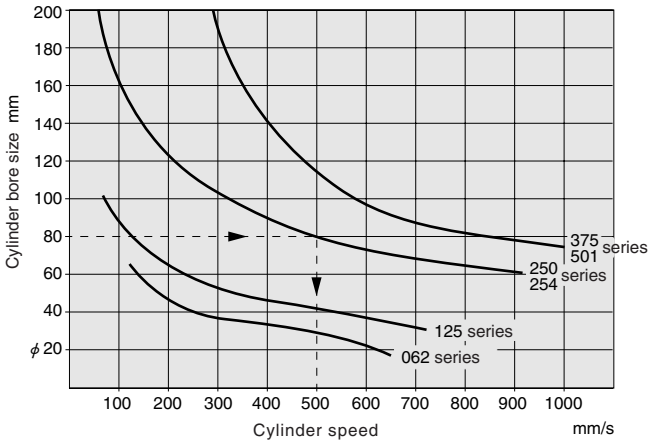

1mm = 0.0394in.
1mm/s = 0.0394in./sec.

＜How to read the graph＞
For example, when operating the ϕ80 [3.150in.] cylinder with the 254 series solenoid valve, a speed of about 500mm/s [19.7in./sec.] can be obtained.

Basic Construction and Features

●The diagram shows an indirect-acting 3-port, normally closed, single solenoid type 501E1

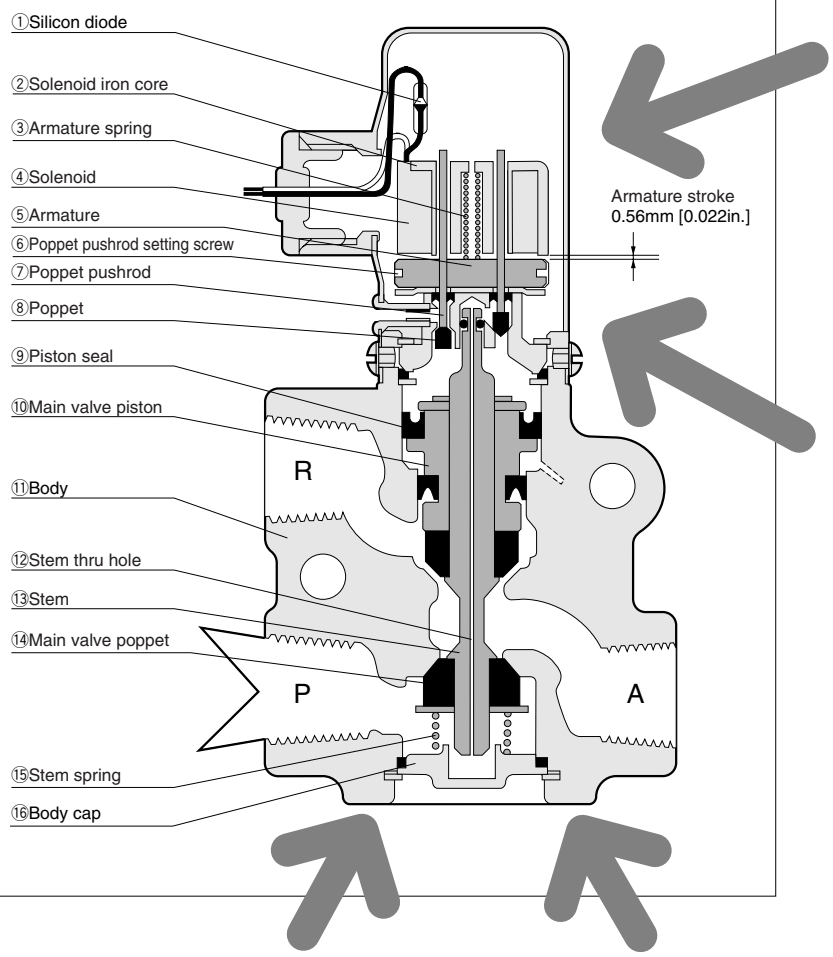

●Small electric current
●No burning failure

The solenoid uses a special construction, with an extremely small 0.56mm [0.022in.] armature stroke, and therefore consumes little electric current.
In addition, the AC type uses a silicon diode for half-wave rectification that ensures extremely stable operation.
Moreover, since there is no in-rush current, the capacity of electrical equipment can be reduced, decreasing the amount of heat generated in high-frequency operations. The coil will not burn even if the armature unactuates under some abnormal situation.

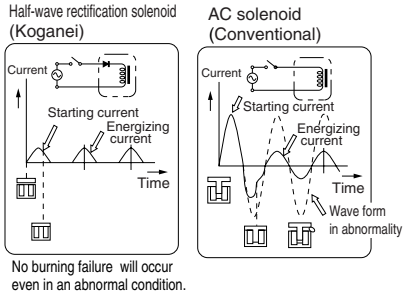

●No solenoid coil wire breaks or damages

The coil is a vacuum epoxy resin impregnated mold, for high resistance to heat, cold, humidity and vibration, and completely eliminates wire-break failure. Moreover, the iron core is not a laminated sheet, but rather machined a single block, for superior mechanical strength against heat or shocks, and endures a long time without deformation or breakage.

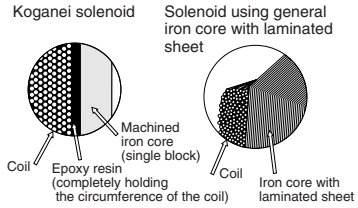

●Compact and light

A poppet construction with unique and compact design. The body is made of light aluminum alloy.

●No sticking

Entering foreign materials into a valve's interior, not using for a long period, etc., could cause the main valve piston to stick. This is not a problem at all with the poppet type round solenoid valves.

●Any mounting direction acceptable

While some valves will require that the mounting direction is vertical or horizontal to operate, the round solenoid valve remains undisturbed regardless of whether the direction is off to some degree, upper or lower, or left or right.

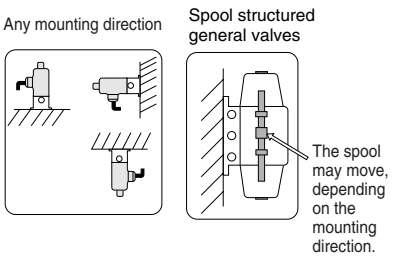

●No need for lubrication

With virtually no sliding parts, there is no need for lubrication except for a few specific models.
This means no break-downs, caused by such as galling due to insufficient lubrication. It can also eliminate periodic lubrication expenses.

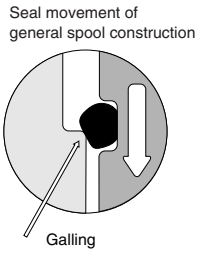

●No leakage due to foreign materials in the media

While foreign materials in the media can often cause leaks, the round solenoid valve uses rubber to absorb the distortions caused by a certain volume of foreign materials to prevent leaks.

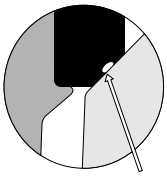

●Can operate in high-frequency applications

The poppet and stem section have low mass and the stroke is short, helping to reduce inertial force, while the synthetic rubber flexibly absorbs impacts, enabling excellent durability in continuous, high-frequency operations.

●Many kinds of voltages, common to each models
(Except for explosion proof valves)

While the standard specifications are AC100V and 200V, many other voltages are available, as shown in the appended table. Many of these voltages are common to each model, and therefore offer interchangeability, good quality control and stable quality.
All solenoids, including the DC types, have the same shape and same dimensions.

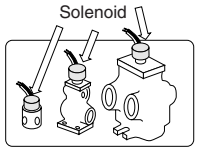

Solenoid common to each series

●Extremely long operating life

With virtually no sliding parts, and with the large elastic capacity of the synthetic rubber used in the stem, the high capacity design eliminates any concerns about wear or damage. The operating life is therefore extremely long, and all models except a very few can last over more than 10 million operating cycles.

Solenoid Types and Operating Principles

(While the schematic diagrams show the direct-acting 062 series, 3-port valve, the basic construction of the solenoid is the same for the 4-port valve and for the pilot section of the indirect acting valve.)

Single solenoid type, normally closed

(E1 type, NC)

Symbol

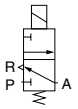

De-energized

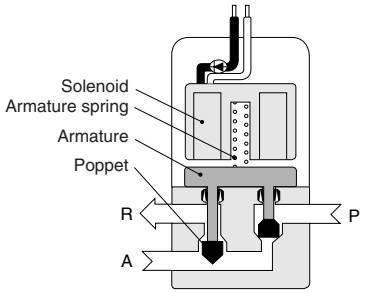

Energized

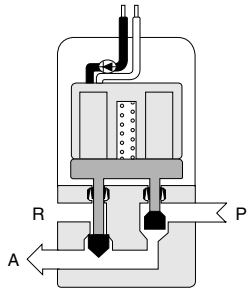

1. When de-energized, air coming through port P is closed by the poppet at P, and air at A goes to port R.
2. When energized, the P side poppet opens and the R side poppet closes, so that the air flows from P to A.
3. When power is cut off, the armature is pushed downward by the armature spring to change the valve to a de-energized condition.

Single solenoid type, normally open

(E1 type, NO)

Symbol

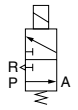

De-energized

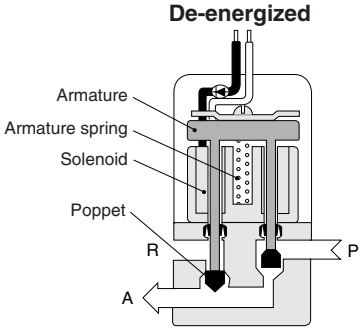

Energized

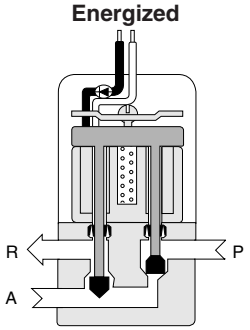

1. When de-energized, the air coming through port P flows to A, but the R side is closed.
2. When energized, the P side poppet closes and the R side poppet opens, so that the air flows from A to R.
3. When power is cut off, the armature is pushed upward by the armature spring to change the valve to a de-energized condition.

Keep solenoid type

(SE2 type)

Symbol

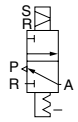

Energizing R-C
(momentarily or continuously)

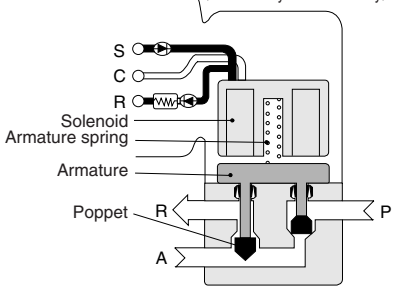

Energizing S-C
(momentarily or continuously)

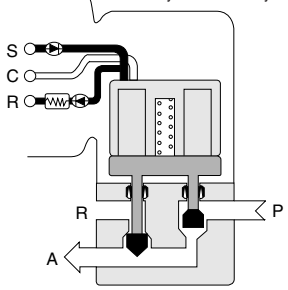

1. When power is supplied to the R-C terminal, the air coming from P is blocked by the poppet at P, and air flows A to R.
2. When power is supplied to the S-C terminal, the P side poppet opens and the R side poppet closes, so that the air flows from P to A.
3. Even if power to the S-C terminal is cut off, a strong residual magnetic force maintains the previous position.
4. When power is supplied to the R-C terminal, the residual magnetic force disappears, and the armature is pushed downward by the armature spring.

For details, see p. 883～884.

Double solenoid type

(E2 type)

Symbol

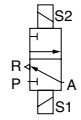

Energizing solenoid A
(continuous energizing)

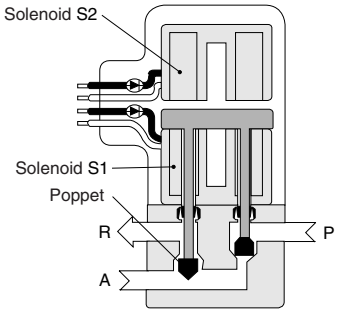

Energizing solenoid B
(continuous energizing)

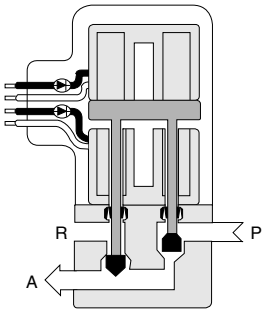

1. When the S1 solenoid is in an energizing condition, the air coming from P is blocked by the poppet at P, and air flows from A to R. This condition is firmly maintained by the air pressure applied to the poppet at P.
2. When the S2 solenoid is energized, the P side poppet opens and the R side poppet closes, so that the air flows from P to A. This condition is firmly maintained by the air pressure applied to the poppet at R.
3. While the solenoid is “momentarily energizing holding type” increasing residual magnetism in addition to the normal continuously energizing type, air pressure applied to the poppet guarantees the holding position in the case, as well.

Voltage Types and Current

Single solenoid (E1) and double solenoid (E2) type

Rated voltage V		Current mA (The starting current and energizing current are virtually identical, and are within these values.) 50Hz	60Hz	Color of lead wire
AC	**230**※1	63	55	White, black
	220※1	58	72	
	200	70	65	
	115※1	130	110	Yellow, black
	110※1	120	160	
	100	140	130	
	48※1	410	370	Red, black
	24※1	930	830	
DC	**200**※2	48		White, black
	110※2	80		Yellow, black
	100※2	90		
	48※2	190		Red, black
	24	400		
	12※2	750		
	6※2	1500		

Notes: 1. For items with ※1, specify the frequency and consult us for the delivery.
2. For ※2 items, consult us for the delivery.
3. This table is also applicable to the 3-position solenoid valves 253, 503, and 753 types.
4. For explosion proof solenoid valves, see p. 934.
5. The return current will vary depending on the rated voltage, but in the range of 20～2mA.

Keep solenoid (SE2) type

Rated voltage V		Current mA (The starting current and energizing current are virtually identical, and are within these values.) 50Hz	60Hz	Color of lead wire
AC	**200**	80	70	White, black, red
	100	180	160	Yellow, black, red

Wiring Instructions

Single solenoid (E1) type

●When connecting 2 or more valves in parallel, use the black lead wire for common connections of the AC type. A diode is connected to the black lead wire for the AC type. No diode is in the DC type, so the wiring has no polarity.

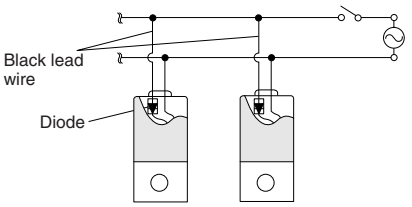

Keep solenoid (SE2) type

●For the 2, 3-port valve, energizing the S1 solenoid in the diagram (the set side) opens the valve, while energizing the S2 solenoid (reset side) closes it.
For the 4, 5-port valve, energizing the S1 solenoid opens the A port, while energizing the S2 solenoid opens the B port.
●For connections of 2 or more valves in parallel, or for instructions for wiring connections with other inductive loads, see p.883.
●The minimum time to energize for operation is 50ms.

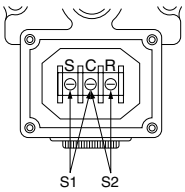

Inside of the terminal

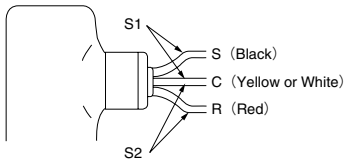

Grommet

Double solenoid (E2) type (continuously energizing holding type)

●When connecting 2 or more valves in parallel, use the black lead wire for common connections of the AC type. A diode is connected to the black lead wire for the AC type. No diode is in the DC type, so the wiring has no polarity.
●Two solenoids, an upper and lower, are built into this valve. They are color-coded with vinyl tape.
For the 2, 3-port valve, energizing the red tape side (for units with terminals, the S2 side in the diagram) opens the valve, while energizing the non-tape side (for units with terminals, the S1 side in the diagram) closes the valve.
For the 4, 5-port valve, energizing the red tape side (for units with terminals, the S2 side in the diagram) opens the A port, while energizing the non-tape side (for units with terminals, the S1 side in the diagram) opens the B port.

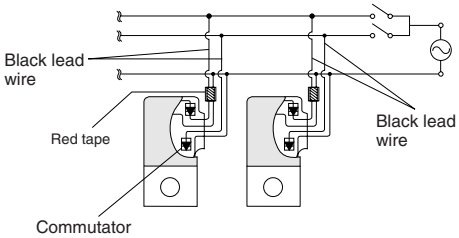

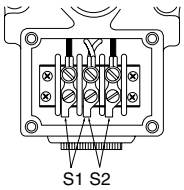

Inside of the terminal

Double solenoid (E2-D) type (momentarily energizing holding type)

●No diode is equipped with either the AC or DC type, so the wiring connections have no polarity.
●The lead wire color coding and instructions of terminal connections are the same as for the continuously energizing holding type.
●While the energizing time required for switching the valve is about 50ms, air pressure is required to maintain that condition. For this reason, continue energizing until exhaust is complete (or when operating a cylinder, until the operation is complete).
Hold the continuous energizing time to 5 minutes or less, and ensure that the de-energized period is longer than the energizing time.

Explanation of Keep Solenoid

Features

While the conventional self-holding type solenoid valve employs 2 solenoids, this keep solenoid type achieves the same operation with just 1 solenoid.
Can firmly maintain both the ON and OFF positions with just momentary energizing.
Holding force is strong, achieving superior vibration and shock resistance in any directions.
Vibration resistance is more than 107.9m/s²{11G} and shock resistance is more than 294.2～392.3m/s²{30～40G} for the direct acting type, and 980.7m/s²{100G} for the indirect acting type. (Shock resistance for the ordinary microswitch is about 294.2m/s²{30G}, and about 49.0～196.1m/s²{5～20G} for the relay.)
No need to worry about burning even with continuous energizing.
Moreover, burning will not occur even if the set signal and reset signal are applied at the same time.

Construction and operation

The diagrams show the direct acting type (or pilot section for the indirect acting valve).

Operation under the set signal

When the ON signal is excited (for 0.05s or more) to the S-C (set side) terminal, as shown in Fig. 1, the solenoid is energized by half-wave rectification, and the armature is attracted (the direction of current flow and the magnetic poles are as shown in the diagram). Then, the armature keeps its position by residual magnetic force even after the ON signal is turned off.

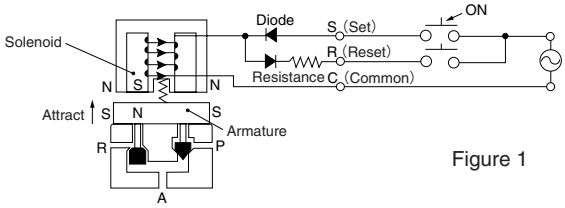

Figure 1

Operation under the reset signal

When the OFF signal is excited (for 0.05s or more) to the R-C (reset side) terminal, as shown in Fig. 2, the current reduced by resistance flows in the direction opposite to the set direction, the residual magnetic force suddenly vanishes, and the armature is returned to its position by a spring. In other words, turning this solenoid valve ON and OFF is achieved by momentary energizing alternately to S-C and R-C.

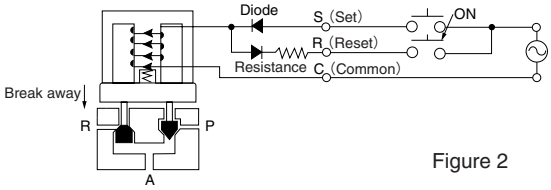

Figure 2

Wiring instructions

●When activating 2 or more valves simultaneously

When the ON and OFF operations are reversed, use different connections to link the S and R terminals, as shown in the diagram at the left. When the S and R terminals are connected into their same respective phases, there is no limit to the number of units that can be connected in parallel.

<The reason>
When the A-1 contact is turned on, current flows along the R-C on Valve 1 and the S-C on Valve 2, and they are both activated normally. The C side is the positive (+), however, the current flows along the dotted lines and causes resets or vibrations, even when a set signal has been excited to valve 2.

Correct wiring

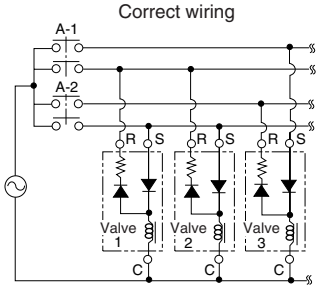

Incorrect wiring

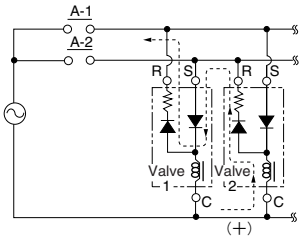

●When connecting inductive loads for other than the SE2 type in parallel

Connect at separate contacts, as shown in the diagram.

<The reason>
Switching the A-1 contact ON and OFF is normal operation. If, however, current is sent along the dotted line to the inductive load side when the A-2 contact is ON, there may be insufficient current on the reset side, and reset may be impossible.

Correct wiring

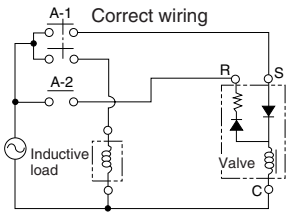

Incorrect wiring

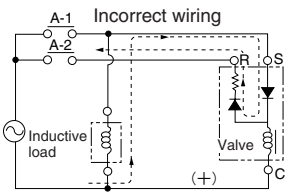

● When using a neon lamp

Install a diode and a surge absorber on the R (reset) side, as shown in the diagram.
Use the diode, with which dielectric voltage is about 3 times as high as the power voltage. If the diode is not installed, or if it is connected in the wrong direction, both neon lamps will light up when the set signal is excited.

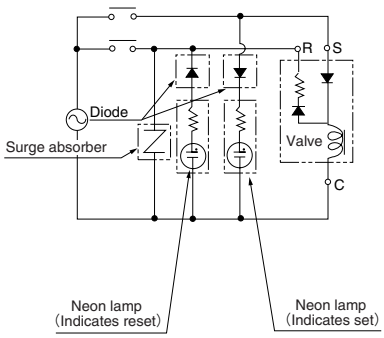

Precautions (Keep solenoid)

1. Note that the keep solenoid valve cannot be used with solid state type relays with leakage current.
   Because the solenoid's reset current is so small that the relay leakage current alone can reset the solenoid after it has been set.
2 Note that exciting the set and reset signals at the same time can cause vibrations.
3. While the valves work under normal usage and environments in most applications, avoid using in locations subject to harsh vibrations or to strong magnetic fields.
4. While the direct acting type maintains the ON or OFF position regardless of the presence or absence of an air supply, caution should be exercised that the indirect acting type switches the stem to the OFF position when the air supply is cut off.
5. Use a fingertip to operate the manual override. Note that the manual override will not activate when the valve is set to the ON position. Operate the manual override after exciting the reset signal to demagnetize and set the reset signal to OFF, such as in a test operation .

Safety Precautions (Round type series solenoid valves and explosion proof solenoid valves)

⚠ Warning

1. When mounting a valve inside the control panels or when an operation requires long energizing periods, provide heat radiation measures to ensure that the ambient temperature always remains within the temperature range specifications. For long-term continuous energizing, consult us.
2. Always check the Catalog, etc., when carrying out wiring and piping of products to ensure that the connections are correctly done. Wrong wiring or piping could result in abnormal operation to the actuator, etc.
3. The solenoid valve's silicon diode could be damaged by surge voltage when a large inductive load is used on the same power supply. Either change to a separate power supply, or install a surge absorber to protect the unit. Solenoids with surge suppression are also available. Consult us.

⚠ Caution

For locations subject to water or to large amounts of dust, use a cover, etc., to protect the valves. Also, attach a muffler, etc., to the R port to prevent dust from entering. Entering water or dust could result in short-term functional shutdowns, sudden drops in performance, or a reduced operating life.

⚠ Attention

1. Use clean air that does not contain degraded compressor oil, etc. and install a filter, etc., close to solenoid valves to remove dust or collected liquid.
2. Ensure that the piping port on the supply side has at the same area or larger than the solenoid valve's effective area.
3. When using an indirect acting valve, use a stop valve between it and the pressure source. When the stop valve is opened before the pressure reaches the minimum operating pressure, the indirect acting valve could fall into a neutral position.
   (All solenoid valves in the 250 series and up are indirect acting valves.)
4. When connecting 2 or more AC type solenoid valves to the same power supply, connect the same color lead wires.
5. Since a diode is equipped with the AC type solenoid valve, the solenoid may sometimes not turn on with the solid state-type relay (SSR) with zero-cross function. For this reason, pay attention before use to the ratings and precautions for use of the solid state-type relay.

⚠ Others

In the Catalog, Class 1 of the recommended oil "Turbine Oil Class 1 (ISO VG32)" signifies "non-additive," while VG32 signifies "viscosity." The previous notation of "Turbine Oil #90" has been changed.

Construction of Manual Override

	Single solenoid（E1）			
	Non-locking type		Locking type	
	Normally closed（NC）	Normally open（NO）	Normally closed（NC）	Normally open（NO）
Construction	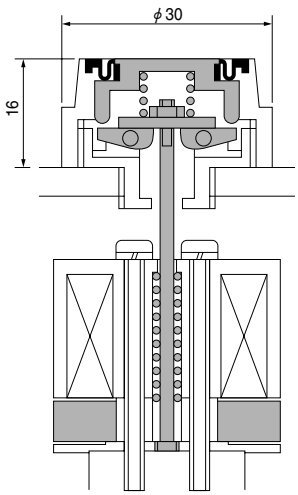	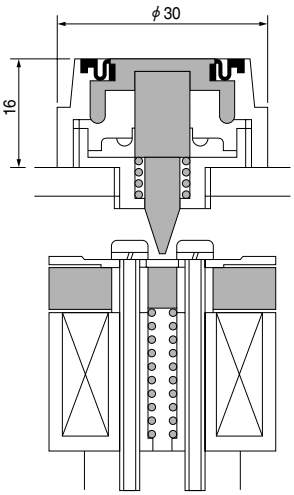	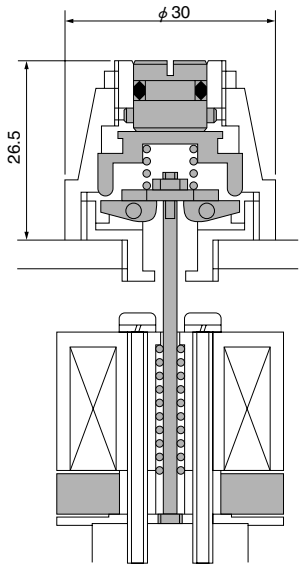	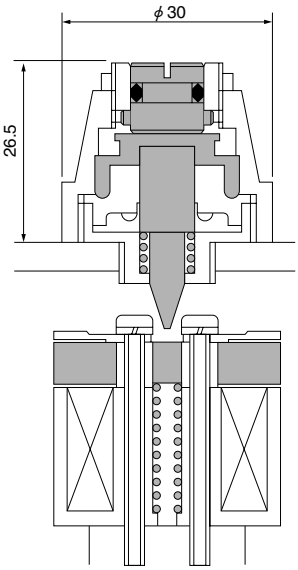
Operation type	Pressing the button with a fingertip turns it on, and releasing the button turns it off.		Using a screwdriver to press the button turns it on, and releasing the button turns it off. Lock it by pressing in and then turning it by 90 degrees (to align with the groove outside). After operation, always release the lock.	

	Keep solenoid（SE2）	Double solenoid（E2）
Construction	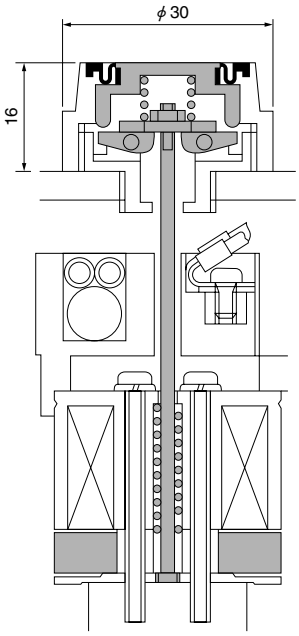	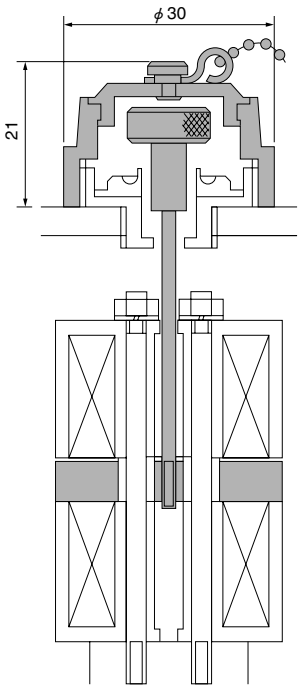
Operation type	Pressing the button turns it on, and releasing the button turns it off. When set as ON, the manual override cannot be operated. To perform test operations, etc., reset to the OFF position before starting. ●Caution The following operation causes the ON position to continue, and the manual override cannot be used to turn the valve OFF. 1.When the manual override is in the ON position, and reset voltage or set voltage is applied. 2.When the manual override is operated while the reset voltage or set voltage has been applied. In this condition, applying the set voltage once, and applying the reset voltage later, allows the manual override to be operated again.	Remove the cap and pull the manual override button with a finger to turn it on, and press it to turn it off. While the manual override has no locking mechanism, the air-pressure holding force maintains the position.

Note: The 3-position solenoid valve manual override has the same construction as the one for the single solenoid normally open type (E1, NO).

Mounting and Adjusting of Manual Override

Non-locking type

Adjusting procedures

1. Screw in nut Ⓐ into the support.
   Screw in nut Ⓐ until it contacts the cam, then return back one-half to one full rotation from that position.

   (In the one-half to one full rotation back position, confirm that some play with the cam exists.)

2. Align slotted groove on the base to the nut Ⓐ slot.
   When it is not aligned to the slot, loosen nut Ⓐ and re-align it.

3. Use nut Ⓑ to lock.
   Insert a screwdriver into the aligned groove, and lock it so that it cannot rotate.
   Do not tighten more than needed.

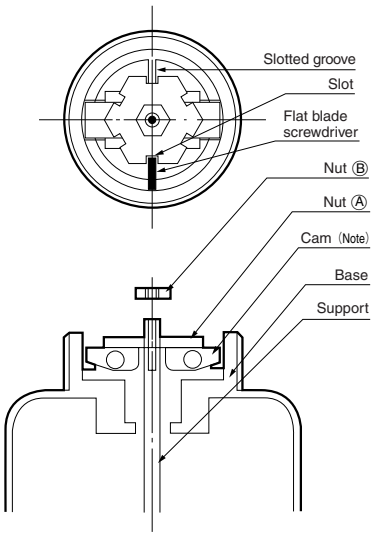

Note: Place the cam under the side with the black mark.

Locking type

Adjusting procedures

The procedure for adjusting nuts Ⓐ and Ⓑ is the same as for the non-locking type.

1. Align the slotted groove of the manual override button to the groove of the adjusting screw, and use a screwdriver to screw in the manual override button and the adjusting screw at the same time.
   Screwing them in causes air to leak, in the case of the direct acting valve, from the R port, and in the case of the indirect acting valve, from the PR port. Keep screwing in further, until the air stops leaking.
2. From the position where the air stops leaking, screw in a further 10 degrees.
   Do not screw in more than needed.
3. Use nut Ⓒ to lock the adjusting screw.
   Lock it with a screwdriver inserted condition.

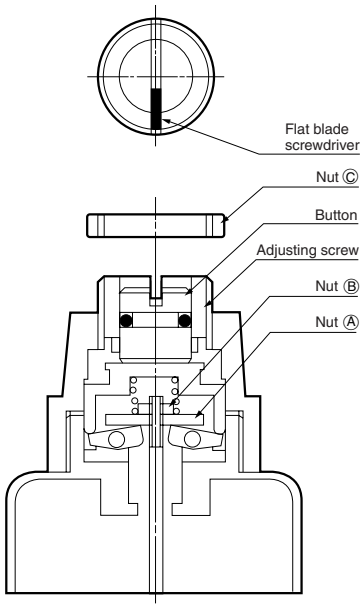

SOLENOID VALVES 062 SERIES

Direct acting 2-, 3-, 4-port

Symbols

Single solenoid (**E1**) type					Double solenoid (**E2**) type			Keep solenoid (**SE2**) type		
2-port		3-port		4-port	2-port	3-port	4-port	2-port	3-port	4-port
NC	NO	NC	NO	NC/NO	NC/NO	NC/NO	——	NC/NO	NC/NO	——
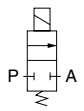	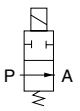	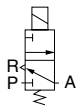	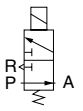	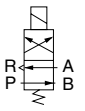	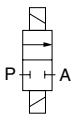	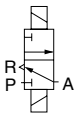	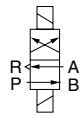	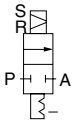	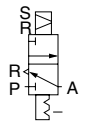	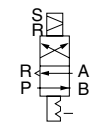
062E1-2	**062E1-2-11**	**062E1**	**062E1-11**	**062-4E1**	**062E2-2**	**062E2**	**062-4E2**	**062SE2-2**	**062SE2**	**062-4SE2**

Basic Models and Valve Functions

Item / Model	062E1-2	062E1-2-11	062E1	062E1-11	062-4E1	062E2-2	062E2	062-4E2	062SE2-2	062SE2	062-4SE2
Number of positions	2										
Number of ports	2		3		4	2	3	4	2	3	4
Valve function	Single solenoid					Double solenoid			Keep solenoid		
	Normally closed (NC, standard)	Normally open (NO, optional)	Normally closed (NC, standard)	Normally open (NO, optional)	——	Normally closed (NC) or Normally open (NO)		——	Normally closed (NC) or Normally open (NO)		——

Specifications

Item / Model		062E1-2	062E1-2-11	062E1	062E1-11	062-4E1	062E2-2	062E2	062-4E2	062SE2-2	062SE2	062-4SE2
Media		Air										
Operation type		Direct acting										
Effective area〔Cv〕	mm²	2.5〔0.12〕				1.8〔0.08〕	2.5〔0.12〕		1.8〔0.08〕	2.5〔0.12〕		1.8〔0.08〕
Port size	Rc	1/4										
Lubrication		Not required										
Operating pressure range	MPa{kgf/cm²} [psi.]	0～0.9 {0～9.2} [0～131]										
Proof pressure	MPa{kgf/cm²} [psi.]	1.35 {13.8} [196]										
Response time ON/OFF	ms ON	30										
	ms OFF	30										
Maximum operating frequency	Hz	5										
Minimum time to energize for self holding	ms	—								50		
Operating temperature range (atmosphere and media)	°C [°F]	0～60 [32～140]										
Mounting direction		Any										
Mass	kg [lb.]	0.3 [0.66]					0.5 [1.1]			0.4 [0.88]		

Solenoid Specifications

Item / Solenoid type		Single solenoid (**E1**)	Double solenoid (**E2**)	Keep solenoid (**SE2**)
Voltage type	V	See the Voltage Types and Current.		
Voltage range	%	Rated voltage ±10%		Rated voltage +10%, −5%
Current	mA	See the Voltage Types and Current.		
Energizing type		Continuously energizing type		Common type for momentarily and continuously energizing
Insulation type		B type		
Wiring type		Grommet type		
Lead wire length	mm [in.]	Approximately 300 [11.8]		

Inner Construction, Major Parts and Materials

●2-, 3-port

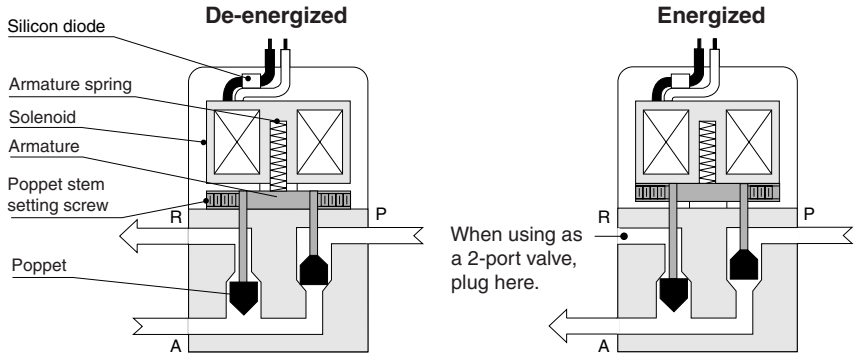

●For the keep solenoid (**SE2**) type and double solenoid (**E2**) type, see p.881.

●4-port

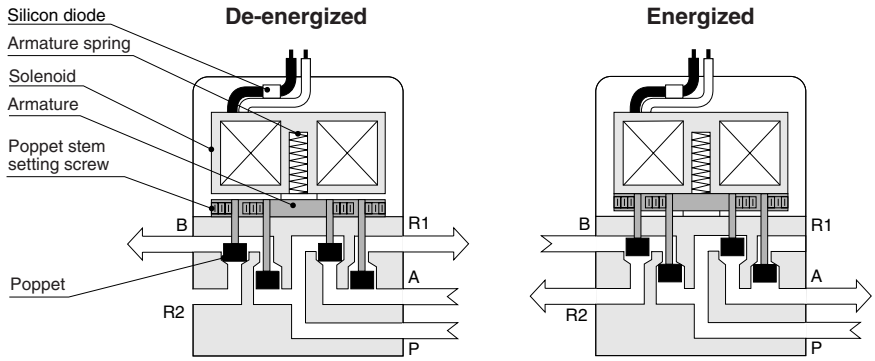

●Although the Inner construction schematic diagram shows R1 and R2 separately, these are in fact combined inside the body, with just the Rc1/4 female thread leading to the outside.
●For the keep solenoid (**SE2**) type and double solenoid (**E2**) type, see p.881.

Parts	Materials
Body	Aluminum alloy (anodized)
Poppet stem	Brass
Poppet	Synthetic rubber
Seal	

Flow Rate

●2-, 3-port

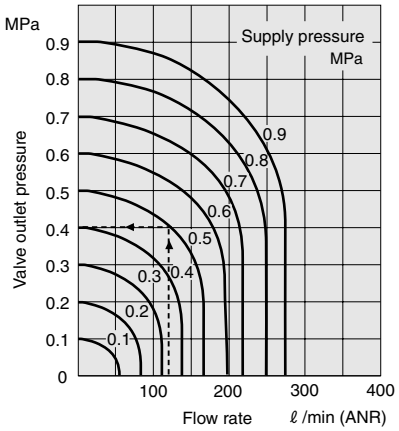

How to read the graph
When the supply pressure is 0.5MPa [73psi.] and the flow rate is 120 ℓ /min [4.24ft³/min.] (ANR), the valve outlet pressure becomes 0.4MPa [58psi.].

1MPa = 145psi., 1 ℓ /min = 0.0353ft³/min.

●4-port

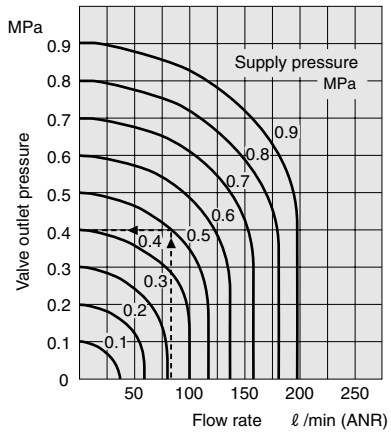

How to read the graph
When the supply pressure is 0.5MPa [73psi.] and the flow rate is 85 ℓ /min [3.0ft³/min.] (ANR), the valve outlet pressure becomes 0.4MPa [58psi.].

1MPa = 145psi., 1 ℓ /min = 0.0353ft³/min.

2-, 3-port Order Codes

●Single solenoid

062E1—□—□—□—□—□

Series | Single solenoid | Number of ports | Valve function | Wiring type | Option | Voltage

Number of ports

Code	Specifications
Blank	3-port
2	2-port

Valve function

Code	Specifications
Blank	NC (normally closed)
11	NO (normally open)

Wiring type

Code	Specifications
Blank	Grommet
37	Conduit
T	With terminal box

Option

Code	Specifications
21	With mounting base
80Note	With manual override (non-locking type)
81Note	With manual override (locking type)

Note: Conduit (**-37**) is standard for **-80** and **-81**, which removes the **-37** code designation.

Voltage

Code	Specifications
AC100V	AC100V 50/60Hz
AC200V	AC200V 50/60Hz
DC24V	DC24V

See notes 1 and 2.
For other voltages, see p.882.

Example: **062E1**-37-AC100V

●Double solenoid

062E2—□—□—□—□—□

Series | Double solenoid | Number of ports | Wiring type | Energizing type | Option | Voltage

Number of ports

Code	Specifications
Blank	3-port
2	2-port

Wiring type

Code	Specifications
Blank	Conduit
T	With terminal box

Energizing type

Code	Specifications
Blank	Continuously energizing type
D	Momentarily energizing type

Option

Code	Specifications
21	With mounting base
80	With manual override

Voltage

Code	Specifications
AC100V	AC100V 50/60Hz
AC200V	AC200V 50/60Hz
DC24V	DC24V

See notes 1 and 2.
For other voltages, see p.882.

Example: **062E2**-21-AC100V

●Keep solenoid

062SE2—□—□—□

Series | Keep solenoid | Number of ports | Option | Voltage

Number of ports

Code	Specifications
Blank	3-port
2	2-port

Option

Code	Specifications
21	With mounting base
80	With manual override
T	With terminal box

Voltage

Code	Specifications
AC100V	AC100V 50/60Hz
AC200V	AC200V 50/60Hz

Example: **062SE2**-21-80-AC100V

Notes: 1. Also specify Hz for AC110V and 220V.
2. For the order code, first enter numbers, in order from small to large, and then enter alphabetic characters.

Dimensions of 2-, 3-port (mm)

●Single solenoid (standard type) 062E1

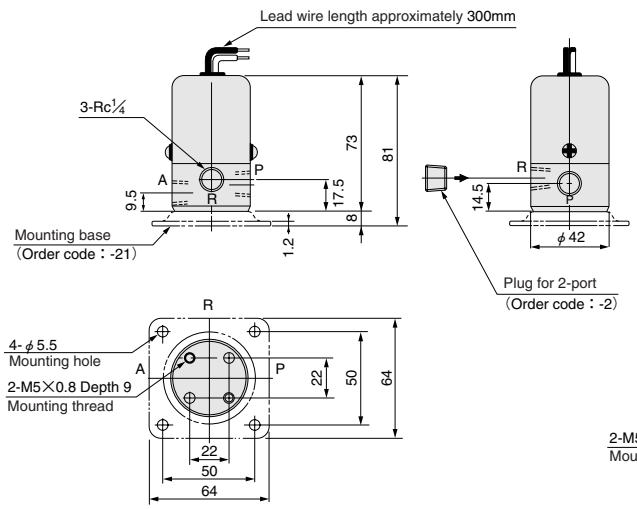

●Single solenoid（with conduit cover）062E1-37

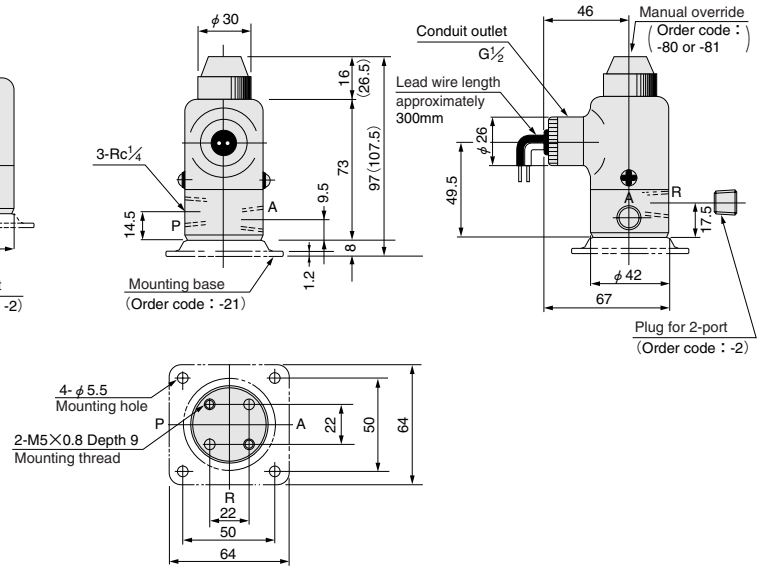

Note: Figures in parentheses ( ) are for the single solenoid with locking type manual override (**-81**).

Dimensions of 2-, 3-port (mm)

●With terminal box

Single solenoid	062E1-T
Double solenoid	062E2-T
Keep solenoid	062SE2-T

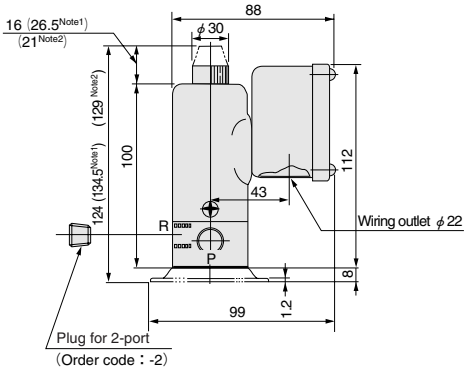

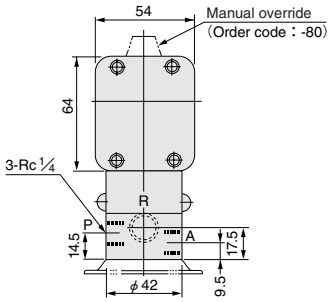

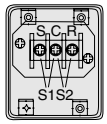

Inside of the terminal of keep solenoid

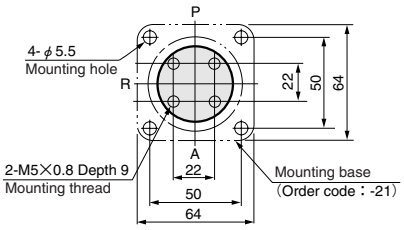

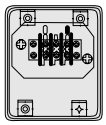

Inside of the terminal of single solenoid

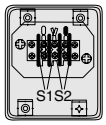

Inside of the terminal of double solenoid

※For wiring instructions, see p.882.

Notes: 1. For the single solenoid with locking type manual override (**-81**).
2. For double solenoid

●Double solenoid (standard type) 062E2
●Keep solenoid (standard type) 062SE2

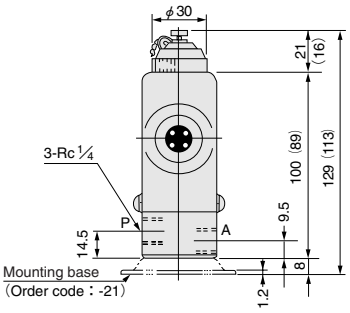

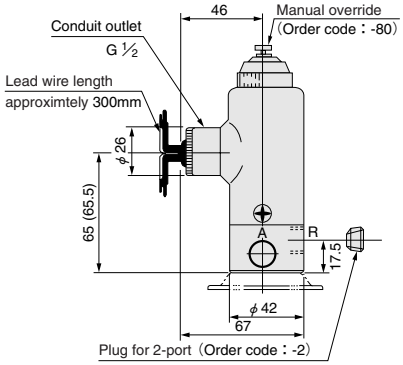

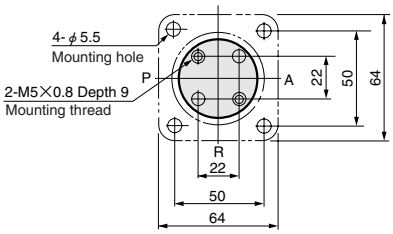

Note: Figures in parentheses ( ) are for the keep solenoid.

4-port Order Codes

●Single solenoid

062—4E1— □ — □ — □

Series | Single solenoid | Wiring type | Option | Voltage

Wiring type

Code	Specifications
Blank	Grommet
37	Conduit
T	With terminal box

Note: Conduit (**-37**) is standard for **-80** and **-81**, which removes the **-37** code designation.

Option

Code	Specifications
21	With mounting base
70	With speed controller
80Note	With manual override (non-locking type)
81Note	With manual override (locking type)

Voltage

Code	Specifications
AC100V	AC100V 50/60Hz
AC200V	AC200V 50/60Hz
DC24V	DC24V

See notes 1 and 2. For other voltages, see p.882.

Example: **062-4E1**-21-70-AC100V

●Double solenoid

062—4E2— □ — □ — □ — □

Series | Double solenoid | Wiring type | Energizing type | Option | Voltage

Wiring type

Code	Specifications
Blank	Conduit
T	With terminal box

Energizing type

Code	Specifications
Blank	Continuously energizing type
D	Momentarily energizing type

Option

Code	Specifications
21	With mounting base
70	With speed controller
80	With manual override

Voltage

Code	Specifications
AC100V	AC100V 50/60Hz
AC200V	AC200V 50/60Hz
DC24V	DC24V

See notes 1 and 2.
For other voltages, see p.882.

Example: **062-4E2**-21-70-AC100V

●Keep solenoid

062—4SE2— □ — □

Series | Keep solenoid | Option | Voltage

Option

Code	Specifications
21	With mounting base
70	With speed controller
80	With manual override
T	With terminal box

Voltage

Code	Specifications
AC100V	AC100V 50/60Hz
AC200V	AC200V 50/60Hz

Example:
062-4SE2-21-70-AC100V

Notes: 1. Also specify Hz for AC110V and 220V.
2. For the order code, first enter numbers, in order from small to large, and then enter alphabetic characters.

Dimensions of 4-port (mm)

●Single solenoid (standard type) 062-4E1

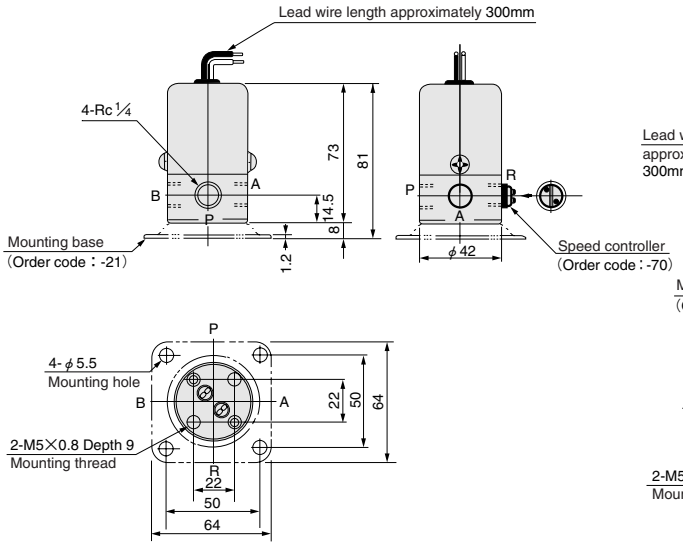

●Single solenoid (with conduit cover) 062-4E1-37

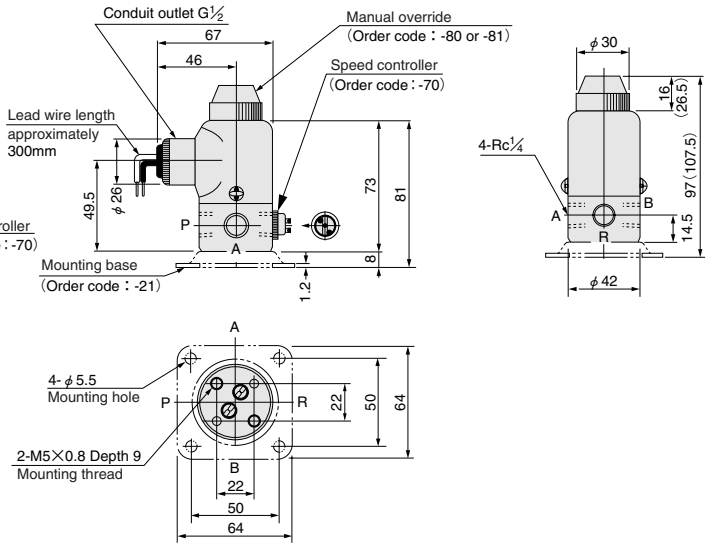

Note: Figures in parentheses ( ) are for the single solenoid with locking type manual override (**-81**).

Dimensions of 4-port (mm)

●With terminal box

Single solenoid	062-4E1-T
Double solenoid	062-4E2-T
Keep solenoid	062-4SE2-T

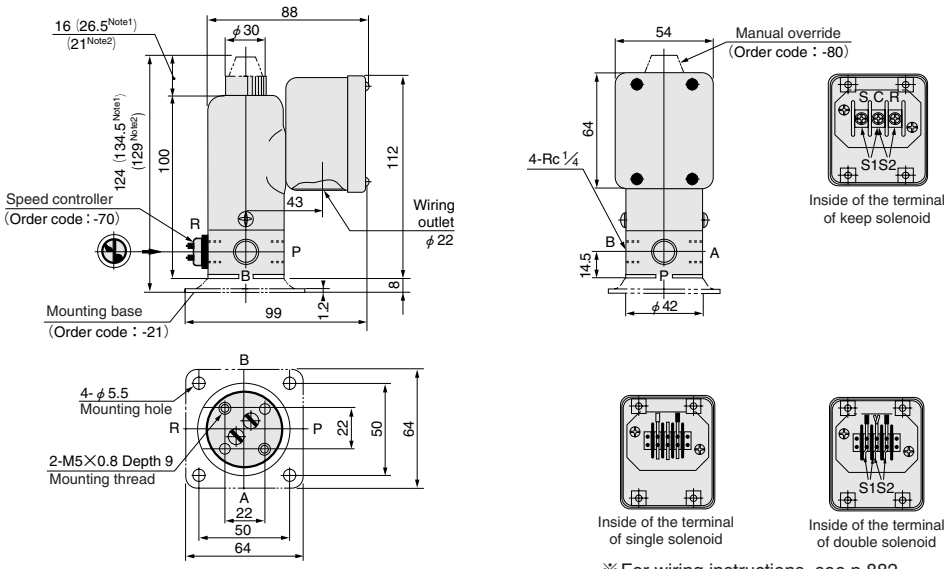

※For wiring instructions, see p.882.

Notes: 1. For single solenoid with locking type manual override (**-81**).
2. For double solenoid

●Double solenoid (standard type) 062-4E2
●Keep solenoid (standard type) 062-4SE2

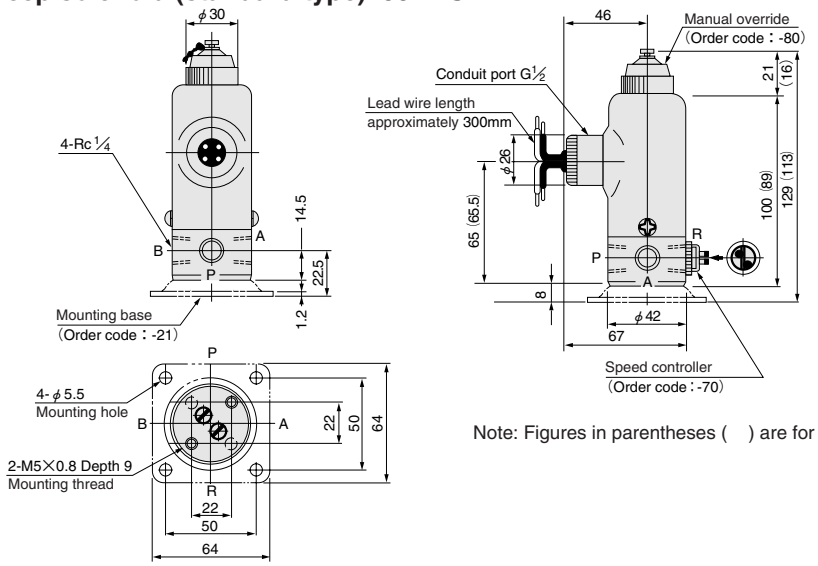

Note: Figures in parentheses ( ) are for the keep solenoid.

Speed Controller Mounting and Adjustment Instructions

Mounting instructions Differs from the 125 series.

1. Return the adjusting screws 1 and 2, without excessive force, to their original positions (the A dimension in the right figure of about 6mm [0.24in.]).
2. Screw the plug in until the dimension from the plug end surface to the lock nut becomes 3～3.5mm [0.118～0.138in.] (the B dimension in the diagram) and align the plug's groove for screwdriver to be vertical, and then secure the lock nut in place.
   (Since the brake ring serves as the lock ring for the adjusting screws, it can still be used even if the outer surface is scratched.)
3. Screw in the adjusting screws until the end rubber of the adjusting screws lightly strikes the seat surface (the A dimension at this time is 2.5～3mm [0.098～0.118in.]), and then return 1 rotation.

Adjusting instructions

Tightening the adjusting screw throttles the exhaust and reduces the cylinder speed. Returning about 0.5mm [0.020in.] (1 rotation) from the fully tightened position leaves it virtually full open, and any further return rotation will not increase the speed.
Do not return more than 6mm [0.236in.] (the A dimension in the diagram) from the plug end.

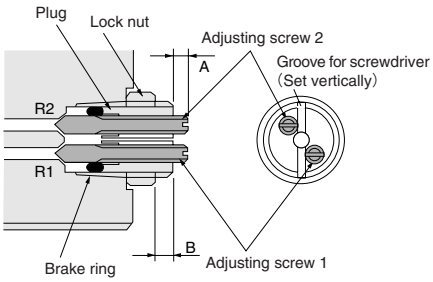

SOLENOID VALVES 062 SERIES

Manifold

Order Codes

MM6 □ Stn. 1～3 **M062E1**-AC100V
Stn. 4 **M062-4E1**-AC100V
Stn. 5 **BP**
Stn. 6 **M062-4E1**-70-AC100V

Number of units
With bottom piping port (Special order)
Station
Valve model

●Number of units (number of mounting valves)

Code	Number of units
1	1
2	2
3	3
⋮	⋮
10	10

●With bottom piping port (A, B port)

Code	Details
Blank	Side piping port only
A	With bottom piping port (special order)

●Station (valve mounting position)

Code	Details
Stn.1	1st station from the left when facing A, B ports.
Stn.2	2nd station from the left when facing A, B ports.
Stn.3	3rd station from the left when facing A, B ports.
⋮	⋮
Stn.10	10th station from the left when facing A, B ports.

●Valve model

Model
M 062E1
M 062SE2
M 062E2
M 062-4E1
M 062-4SE2
M 062-4E2
M 126E1
Block-off plate (order code: **BP**)

Enter the solenoid valve models required for each station.

Notes: 1. The prefix **M** for each valve model signifies a "solenoid valve for manifolds." Enter **M** to all valves for manifold types. The order code for the Slim Cylinder Valpack is **VPS062-4E1-70**. For details about valve models, see the Actuators General Catalog (Slim Cylinder).
2. The **126** series can be mounted together on this manifold base.
3. The "block-off plate" is used to close unused stations.

Manifold Mass (with valves)

kg [lb.]

Mounting valve model / Manifold model	Single solenoid	Keep solenoid	Double solenoid
	M062E1 **M062-4E1** **M126E1**	**M062SE2** **M062-4SE2**	**M062E2** **M062-4E2**
MM1	0.47 [1.04]		0.63 [1.39]
MM2	0.96 [2.12]		1.28 [2.82]
MM3	1.44 [3.18]		1.92 [4.23]
MM4	1.93 [4.26]		2.57 [5.67]
MM5	2.42 [5.34]		3.22 [7.10]
MM6	2.91 [6.42]		3.87 [8.53]
MM7	3.40 [7.50]		4.52 [9.97]
MM8	3.89 [8.58]		5.17 [11.40]
MM9	4.37 [9.64]		5.81 [12.81]
MM10	4.86 [10.72]		6.46 [14.24]
Single valve unit	0.33 [0.73]		0.49 [1.08]

Major Parts and Materials

Parts	Materials
Base	Aluminum alloy (anodized)
Block-off plate	Aluminum alloy (anodized)
Bracket	Steel plate (zinc plated)

Dimensions of Manifold (mm)

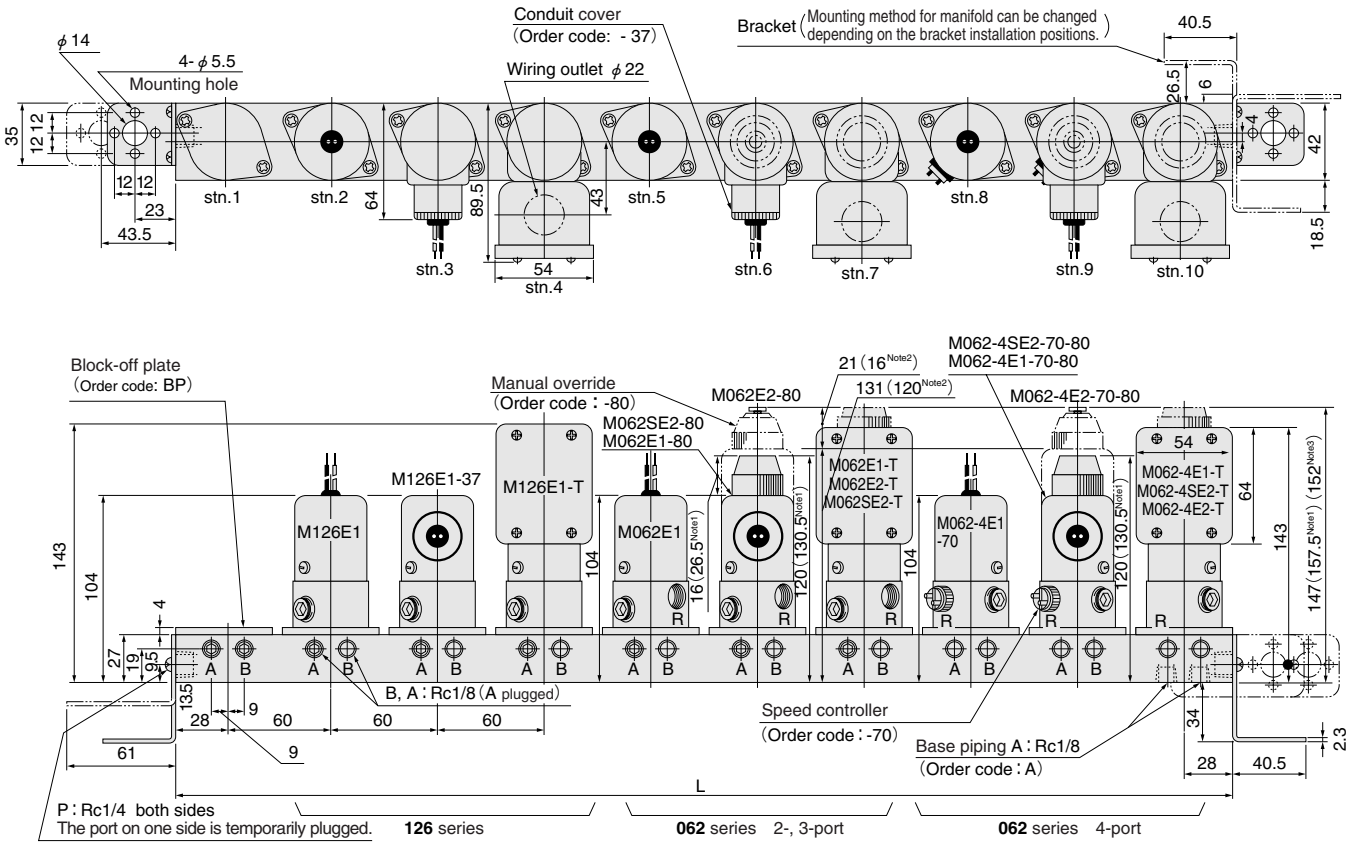

Unit dimensions

Model	MM1	MM2	MM3	MM4	MM5	MM6	MM7	MM8	MM9	MM10
L dimension	56	116	176	236	296	356	416	476	536	596

Notes: 1. For single solenoid with locking type manual override (**-81**).
2. For keep solenoid
3. For double solenoid

SOLENOID VALVES 126 SERIES

Direct acting 2-port

Symbols

NC	NO
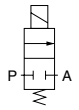	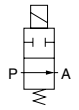
126E1	**126E1-11**

Basic Models and Valve Functions

Item \ Model	126E1	126E1-11
Number of positions	2	
Number of ports	2	
Valve function	Single solenoid	
	Normally closed (NC, standard)	Normally open (NO, optional)

Specifications

Item \ Model		126E1	126E1-11
Media		Air	
Operation type		Direct acting type	
Effective area〔Cv〕	mm^2	5.5〔0.27〕	
Port size	Rc	1/4	
Lubrication		Not required	
Operating pressure range	MPa {kgf/cm^2} [psi.]	0～0.5 {0～5.1} [0～73]	
Proof pressure	MPa {kgf/cm^2} [psi.]	0.75 {7.7} [109]	
Response time ON/OFF	ms ON	30	
	ms OFF	30	
Maximum operating frequency	Hz	4	
Minimum time to energize for self holding	ms	—	
Operating temperature range (atmosphere and media)	°C [°F]	0～60 [32～140]	
Mounting direction		Any	
Mass	kg [lb.]	0.3 [0.66]	

Solenoid Specifications

Item \ Solenoid type		Single solenoid (E1)
Voltage type	V	See the Voltage Types and Current.
Voltage range	%	Rated voltage ±10%
Current	mA	See the Voltage Types and Current.
Energizing type		Continuously energizing type
Insulation type		B type
Wiring type		Grommet type
Lead wire length	mm [in.]	Approximately 300 [11.8]

Inner Construction and Major Parts

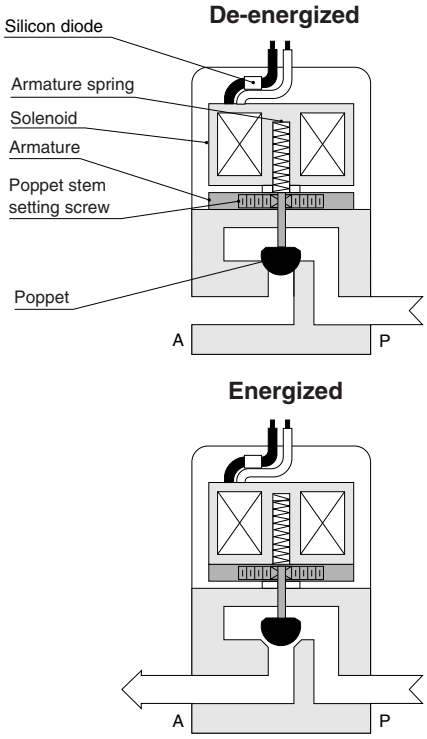

Flow Rate

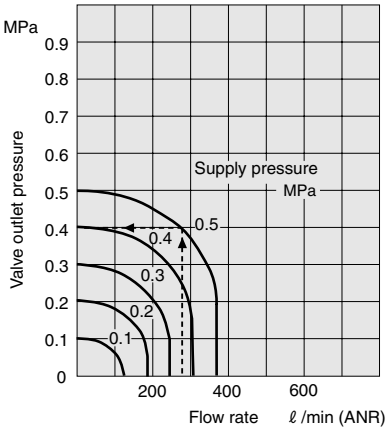

How to read the graph

When the supply pressure is 0.5MPa [73psi.] and the flow rate is 275 ℓ/min [9.71ft³/min.] (ANR), the valve outlet pressure becomes 0.4MPa [58psi.].

1MPa = 145psi., 1 ℓ/min = 0.0353ft³/min.

●Manifold

Manifold base is shared with the 062 series.

See p.894.

Major Parts and Materials

Parts	Materials
Body	Aluminum alloy (anodized)
Poppet stem	Brass
Poppet	Synthetic rubber
Seal	

Order Codes

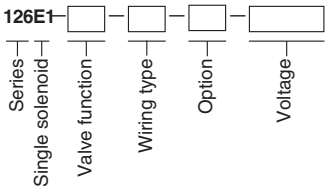

Valve function

Code	Specifications
Blank	NC (normally closed)
11	NO (normally open)

Option

Code	Specification
21	With mounting base

Wiring type

Code	Specifications
Blank	Grommet
37	Conduit
T	With terminal box

Voltage

Code	Specifications
AC100V	AC100V 50/60HZ
AC200V	AC200V 50/60HZ
DC24V	DC24V

See notes 1 and 2.
For other voltages, see p.882.

Notes: 1. Also specify Hz for AC110V and 220V.
2. For the order code, first enter numbers, in order from small to large, and then enter alphabetic characters.

Example: **126E1**-21-AC100V

Dimensions (mm)

●Standard type 126E1

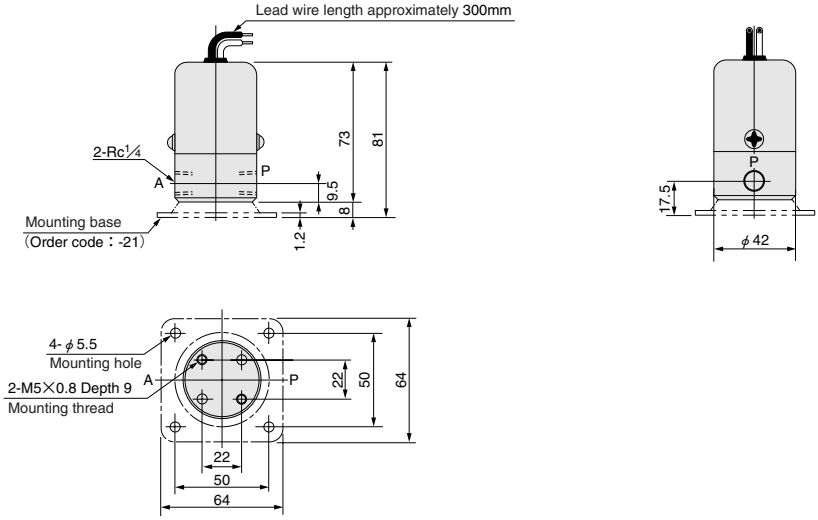

●With conduit cover 126E1-37

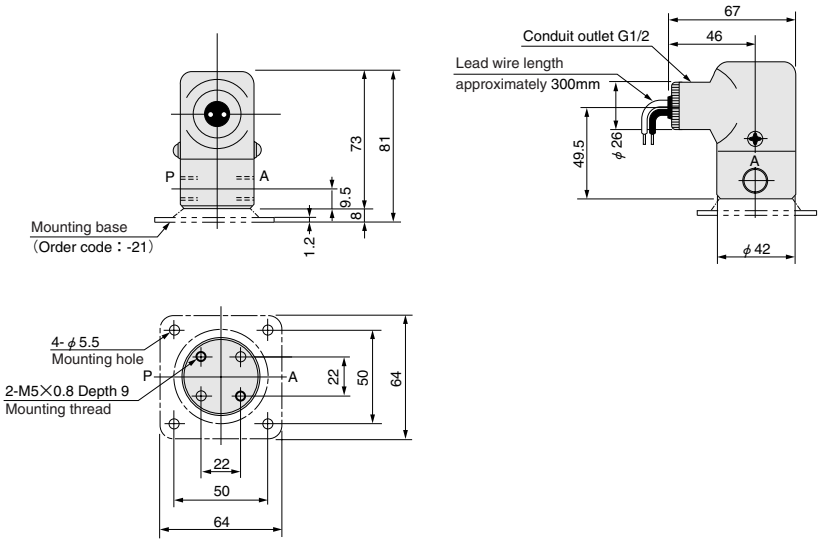

●With terminal box 126E1-T

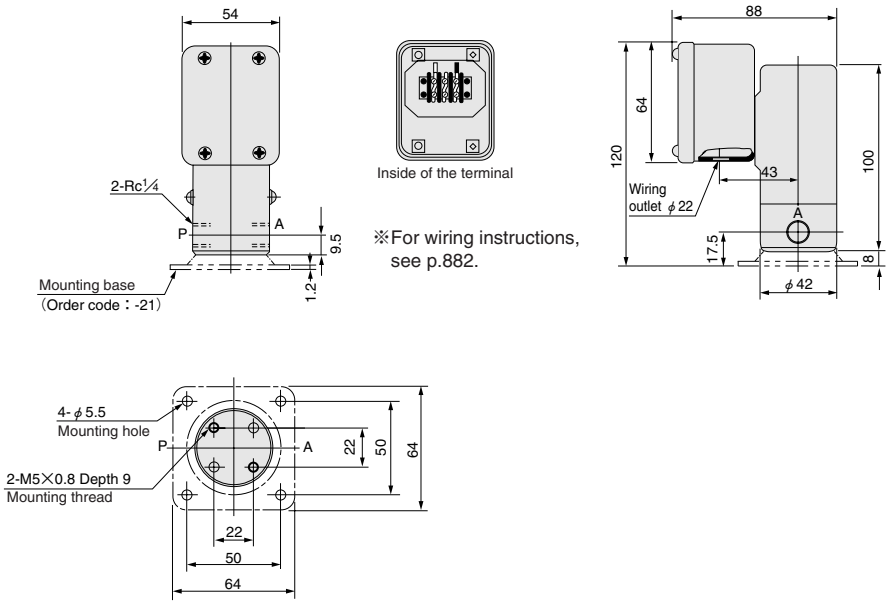

※For wiring instructions, see p.882.

SOLENOID VALVES 125 SERIES

Direct acting 4-port

Symbols

Single solenoid (**E1**) type	Keep solenoid (**SE2**) type
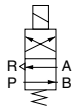	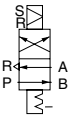
125-4E1	**125-4SE2**

Basic Models and Valve Functions

Item \ Model	**125-4E1**	**125-4SE2**
Number of positions	2	
Number of ports	4	
Valve function	Single solenoid	Keep solenoid

Specifications

Item \ Model		**125-4E1**	**125-4SE2**
Media		Air	
Operation type		Direct acting type	
Effective area〔Cv〕	mm^2	3.5〔0.17〕	
Port size	Rc	1/4	
Lubrication		Required (Turbine Oil Class 1 (ISO VG32) or equivalent)	
Operating pressure range	MPa {kgf/cm^2} [psi.]	0～0.9 {0～9.2} [0～131]	
Proof pressure	MPa {kgf/cm^2} [psi.]	1.35 {13.8} [196]	
Response time ON/OFF	ms ON	35	
	ms OFF	30	
Maximum operating frequency	Hz	5	
Minimum time to energize for self holding	ms	—	50
Operating temperature range (atmosphere and media)	°C [°F]	0～60 [32～140]	
Mounting direction		Any	
Mass	kg [lb.]	0.4 [0.88]	

Solenoid Specifications

Item \ Solenoid type		Single solenoid（**E1**）	Keep solenoid（**SE2**）
Voltage type	V	See the Voltage Types and Current.	
Voltage range	%	Rated voltage ±10%	Rated voltage+10%,−5%
Current	mA	See the Voltage Types and Current.	
Energizing type		Continuously energizing type	Common type for momentarily and continuously energizing
Insulation type		B type (Insulation resistance over 10MΩ)	
Wiring type		Grommet type	
Lead wire length	mm [in.]	300 [11.8]	

Major Parts and Materials

Parts	Materials
Body	Aluminum alloy (anodized)
Poppet stem	Brass
Poppet	Synthetic rubber
Seal	

Inner Construction and Major Parts

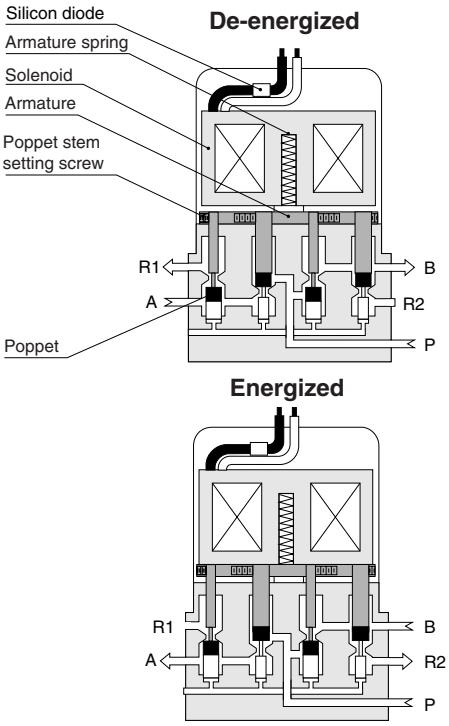

- Although the inner construction schematic diagram shows R1 and R2 separately, these are in fact combined inside the body, with just a Rc1/4 female thread leading to the outside.
- For the keep solenoid (SE2) type, see p.881.

Flow Rate

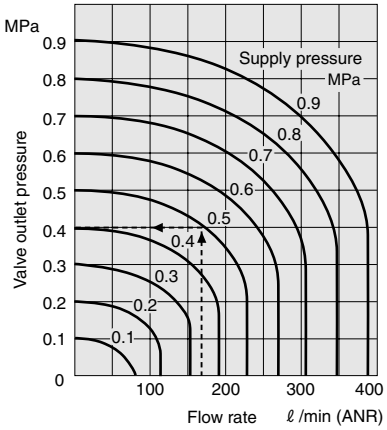

How to read the graph
When the supply pressure is 0.5MPa [73psi.] and the flow rate is 175 ℓ/min [6.18ft³/min.] (ANR), the valve outlet pressure becomes 0.4MPa [58psi.].

1MPa = 145psi., 1 ℓ/min = 0.0353ft³/min.

Order Codes

●Single solenoid

125—**4E1**—□—□—□

Series — Single solenoid — Wiring type — Option — Voltage

Wiring type

Code	Specifications
Blank	Grommet
37	Conduit
T	With terminal box

Option[Note 2]

Code	Specifications
21	With mounting base
70	With speed controller
80	With manual override (non-locking type)
81	With manual override (locking type)

Voltage [Note 1]

Code	Specifications
AC100V	AC100V 50/60Hz
AC200V	AC200V 50/60Hz
DC24V	DC24V

See notes 1 and 2.
For other voltages, see p.882.

Example: **125-4E1**-21-70-AC100V

Notes: 1. Also specify Hz for AC110V and 220V.
2. For the order code, first enter numbers, in order from small to large, and then enter alphabetic characters.

●Keep solenoid

125—**4SE2**—□—□

Series — Keep solenoid — Option — Voltage

Option[Note 2]

Code	Specifications
21	With mounting base
70	With speed controller
80	With manual override
T	With terminal box

Voltage [Note 1]

Code	Specifications
AC100V	AC100V 50/60Hz
AC200V	AC200V 50/60Hz

Example: **125-4SE2**-21-70-AC100V

Dimensions (mm)

●Single solenoid (standard type) 125-4E1

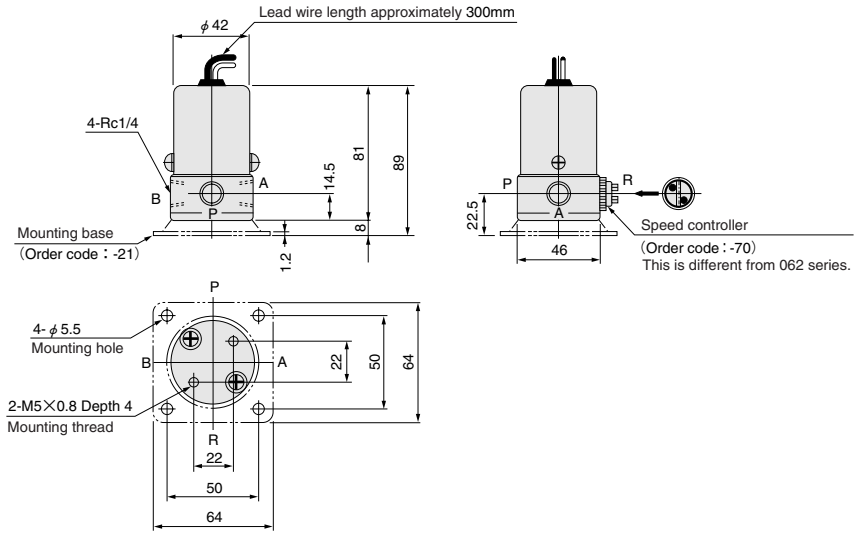

●Single solenoid (with conduit cover) 125-4E1-37
●Keep solenoid (standard type) 125-4SE2

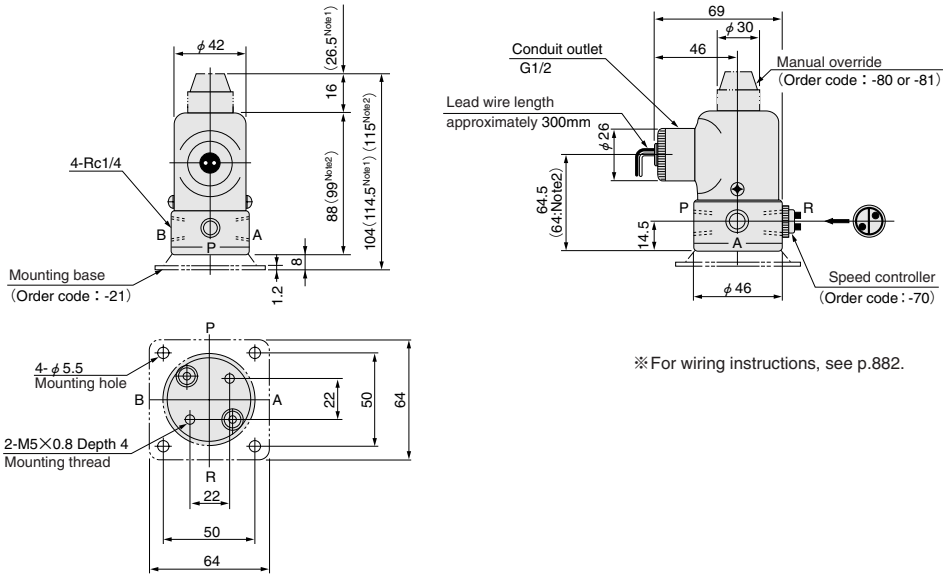

※For wiring instructions, see p.882.

Notes: 1. For the single solenoid with locking type manual override (**-81**).
2. For keep solenoid

Dimensions (mm)

●With terminal box (Single solenoid 125-4E1-T / Keep solenoid 125-4SE2-T)

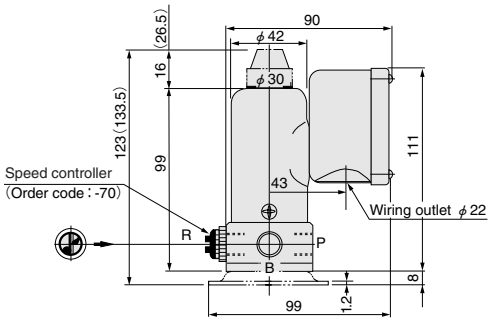

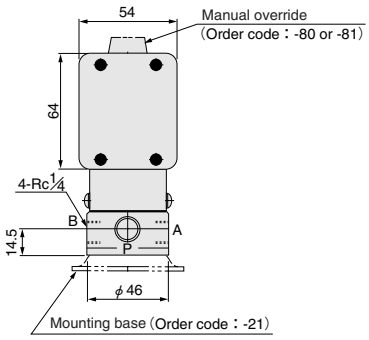

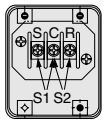

Inside of the terminal of keep solenoid

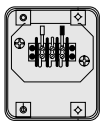

Inside of the terminal of single solenoid

※For wiring instructions, see p.882.

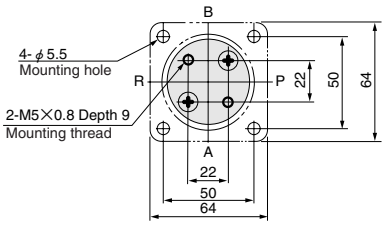

Note: For the single solenoid with locking type manual override (**-81**).

Speed Controller Mounting and Adjustment Instructions

Mounting instructions Differs from the 062 series.

1. Leave adjusting screws 1 and 2 protruding about 4mm [0.16in.] from the plug (the A dimension in the right diagram). This position is where the adjusting screw's end rubber comes in contact with the brake ring.
2. Screw the plug about 2 rotations into the valve body, and then return adjusting screws 1 and 2, without excessive force, to their original positions (the A dimension in the diagram of about 5mm [0.20in.]).
   At this time, the adjusting screw's end rubber makes the brake ring expand outward and comes into contact with the plug end.
3. Screw the plug in until the dimension from the plug end surface to the lock nut becomes 2.5～3mm [0.098～0.118in.] (the B dimension in the diagram), align the plug's groove for screwdriver to be vertical, and then secure the lock nut in place.
   (Since the brake ring serves as the lock ring for the adjusting screws, it can still be used even if the outer surface is scratched.)
4. Screw the adjusting screws in until the end rubber of the adjusting screws lightly strikes the seat surface (the A dimension at this time is 3～3.5mm [0.118～0.138in.]), and then return 1 rotation.

Adjusting instructions

Tightening the adjusting screw throttles the exhaust and reduces the cylinder speed. Returning about 0.5mm [0.020in.] (1 rotation) from the fully tightened position leaves it virtually full open, and any further return rotation will not increase the speed.
Do not return more than 5mm [0.20in.] (the A dimension in the diagram) from the plug end.

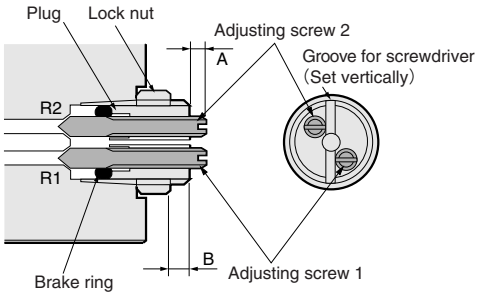

Manifold

Order Codes

MM6 Stn. 1～3 **M125-4E1**-AC100V
Stn. 4 **M125-4E1**-70-AC100V
Stn. 5 **BP**
Stn. 6 **M125-4E1**-AC100V

Number of units | Station | Valve model

●Number of units (number of mounting valves)

Code	Number of units
1	1
2	2
3	3
⋮	⋮
10	10

●Station (valve mounting position)

Code	Details
Stn.1	1st station from the left when facing A, B ports.
Stn.2	2nd station from the left when facing A, B ports.
Stn.3	3rd station from the left when facing A, B ports.
⋮	⋮
Stn.10	10th station from the left when facing A, B ports.

●Valve model

Model
M125-4E1
M125-4SE2
Block-off plate (order code: **BP**)

Enter the solenoid valve models required for each station.

Notes: 1. The prefix **M** of each valve model signifies a “solenoid valve for manifolds.” Enter **M** to all valves for manifold types.
The valve type for the valpack is **VPS125-4E1-70**. For details about valve models, see “Order Codes” on p.899.
2. The “block-off plate” is used to close unused stations.

Manifold Mass (with valves)

kg [lb.]

Mounting valve model / Manifold model	Single solenoid	Keep solenoid
	M125-4E1	**M125-4SE2**
MM1	0.59 [1.30]	
MM2	1.13 [2.49]	
MM3	1.67 [3.68]	
MM4	2.22 [4.90]	
MM5	2.76 [6.09]	
MM6	3.30 [7.28]	
MM7	3.84 [8.47]	
MM8	4.38 [9.66]	
MM9	4.93 [10.87]	
MM10	5.47 [12.06]	
Single valve unit	0.37 [0.82]	

Major Parts and Materials

Parts	Materials
Base	Aluminum alloy (anodized)
Block-off plate	Aluminum alloy (anodized)

Dimensions (mm)

Unit dimensions

Model	L
MM1	76
MM2	134
MM3	192
MM4	250
MM5	308
MM6	366
MM7	424
MM8	482
MM9	540
MM10	598

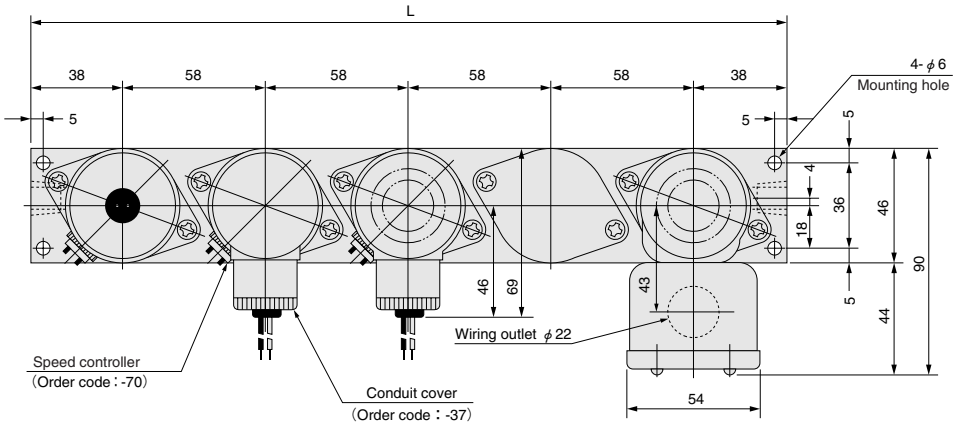

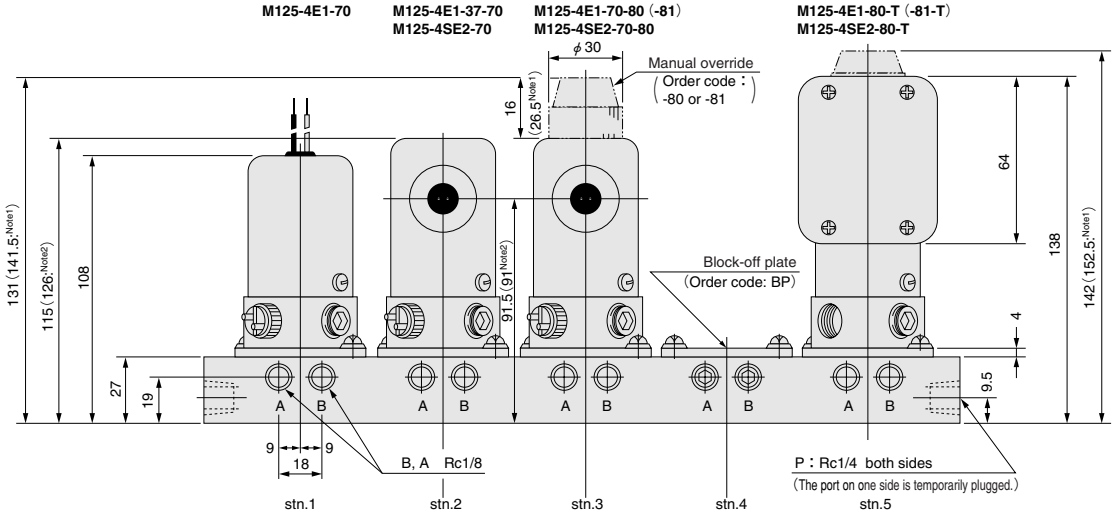

Notes: 1. For the single solenoid with locking type manual override (**-81**).
2. For keep solenoid

SOLENOID VALVES 250 SERIES

Indirect acting diaphragm 2-, 3-, 5-port

Symbols

Single solenoid (**E1**) type					Double solenoid (**E2**) type			Keep solenoid (**SE2**) type		
2-port		3-port		5-port	2-port	3-port	5-port	2-port	3port	5-port
NC	NO	NC	NO	———	NC/NO	NC/NO	———	NC/NO	NC/NO	———
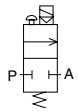	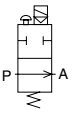	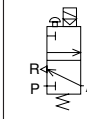	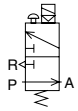	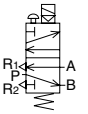	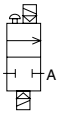	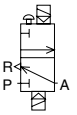	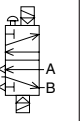	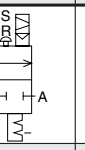	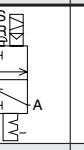	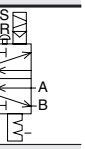
250E1-2 **2503E1-2**	**250E1-2-11** **2503E1-2-11**	**250E1** **2503E1**	**250E1-11** **2503E1-11**	**250-4E1** **2503-4E1**	**250E2-2** **2503E2-2**	**250E2** **2503E2**	**250-4E2** **2503-4E2**	**250SE2-2** **2503SE2-2**	**250SE2** **2503SE2**	**250-4SE2** **2503-4SE2**

Basic Models and Valve Functions

Item \ Model	250E1-2 2503E1-2	250E1-2-11 2503E1-2-11	250E1 2503E1	250E1-11 2503E1-11	250-4E1 2503-4E1	250E2-2 2503E2-2	250E2 2503E2	250-4E2 2503-4E2	250SE2-2 2503SE2-2	250SE2 2503SE2	250-4SE2 2503-4SE2
Number of positions	2										
Number of ports	2		3		5	2	3	5	2	3	5
Valve function	Single solenoid					Double solenoid			Keep solenoid		
	Normally closed (NC, standard)	Normally open (NO, optional)	Normally closed (NC, standard)	Normally open (NO, optional)	———	Normally closed (NC) or Normally open (NO)		———	Normally closed (NC) or Normally open (NO)		———

Specifications

Item \ Model		250E1-2 2503E1-2	250E1-2-11 2503E1-2-11	250E1 2503E1	250E1-11 2503E1-11	250-4E1 2503-4E1	250E2-2 2503E2-2	250E2 2503E2	250-4E2 2503-4E2	250SE2-2 2503SE2-2	250SE2 2503SE2	250-4SE2 2503-4SE2
Media		Air										
Operation type		Internal pilot type										
Effective area〔Cv〕 mm²		15〔0.76〕										
Port size Rc	**250**□	1/4										
	2503□	3/8										
Lubrication		Not required										
Operating pressure range MPa {kgf/cm²} [psi.]		0.2～0.9 {2.0～9.2} [29～131]										
Proof pressure MPa {kgf/cm²} [psi.]		1.35 {13.8} [196]										
Response time ON/OFF ms	ON	30				70	30		70	30		70
	OFF	50				60	50		60	50		60
Maximum operating frequency Hz		5										
Minimum time to energize for self holding ms		—								50		
Operating temperature range (atmosphere and media) °C [°F]		0～60 [32～140]										
Mounting direction		Any										
Mass kg	**250**□	0.6 [1.3]				0.9 [2.0]	0.7 [1.5]		1.0 [2.2]	0.7 [1.5]		1.0 [2.2]
	2503□	0.7 [1.5]				0.9 [2.0]	0.8 [1.8]		1.0 [2.2]	0.8 [1.8]		1.0 [2.2]

Solenoid Specifications

Item \ Solenoid type	Single solenoid (**E1**)	Double solenoid (**E2**)	Keep solenoid (**SE2**)
Voltage type V	See the Voltage Types and Current.		
Voltage range %	Rated voltage ±10%		Rated voltage +10%, –5%
Current mA	See the Voltage Types and Current.		
Energizing type	Continuously energizing type		Common type for momentarily and continuously energizing
Insulation type	B type		
Wiring type	Grommet type		
Lead wire length mm [in.]	Approximately 300 [11.8]		

Inner Construction, Major parts and Materials

●2-,3-port

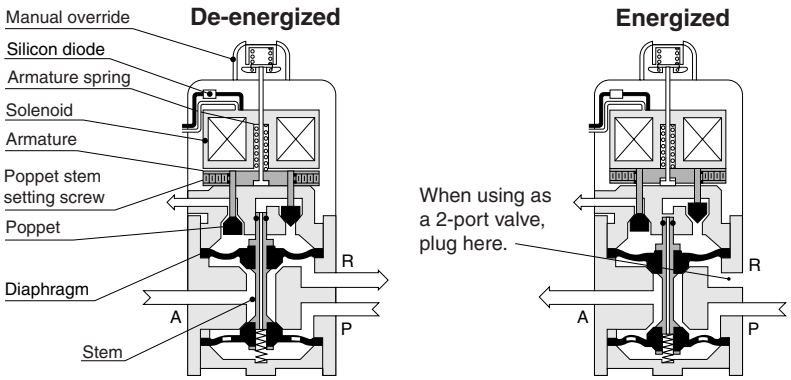

●For keep solenoid (**SE2**) type and double solenoid (**E2**) type, see p.881.

●5-port

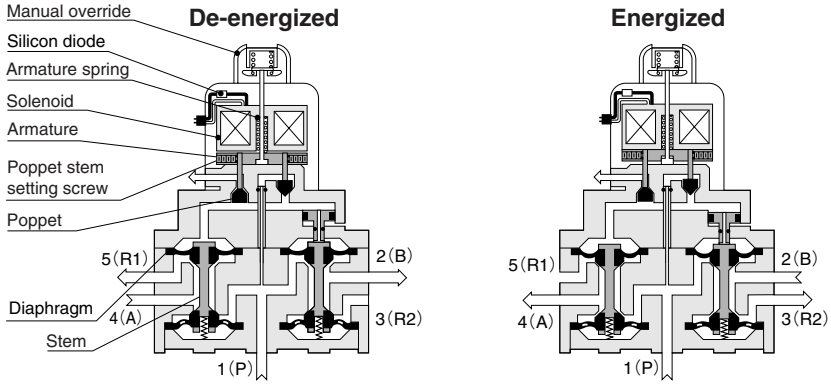

●For keep solenoid (**SE2**) type and double solenoid (**E2**) type, see p.881.

Parts	Materials
Body	Aluminum alloy (anodized)
Stem	Brass
Diaphragm	Synthetic rubber
Seal	

Flow Rate

●2-, 3-port

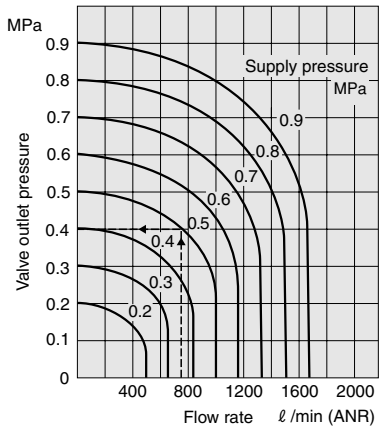

How to read the graph
When the supply pressure is 0.5MPa [73psi.] and the flow rate is 740 ℓ/min [26.1ft³/min.] (ANR), the valve outlet pressure becomes 0.4MPa [58psi.].

1MPa = 145psi., 1 ℓ/min = 0.0353ft³/min.

●5-port

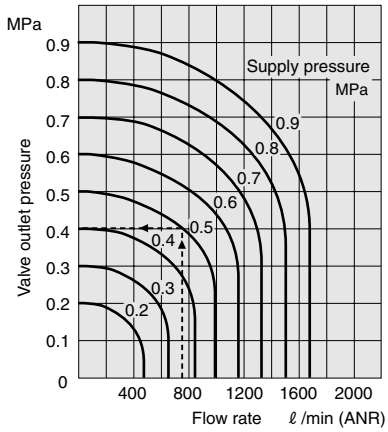

How to read the graph
When the supply pressure is 0.5MPa [73psi.] and the flow rate is 740 ℓ/min [26.1ft³/min.] (ANR), the valve outlet pressure becomes 0.4MPa [58psi.].

1MPa = 145psi., 1 ℓ/min = 0.0353ft³/min.

Rc1/4, 3/8 and 2-, 3-port Order Codes

●Single solenoid

250 **E1** — □ — □ — □ — □ — □

Series | Single solenoid | Number of ports | Valve function | Manual override | Wiring type | Voltage

Series

Code	Specifications
250	Port size Rc1/4
2503	Port size Rc3/8

Number of ports[Note 2]

Code	Specifications
Blank	3-port
2	2-port

Valve function[Note 2]

Code	Specifications
Blank	NC (normally closed)
11	NO (normally open)

Manual override[Note 2]

Code	Specifications
Blank	Non-locking type
81	Locking type

Wiring type[Note 2]

Code	Specifications
Blank	Conduit
T	With terminal box

Voltage[Note 1]

Code	Specifications
AC100V	AC100V 50/60Hz
AC200V	AC200V 50/60Hz
DC24V	DC24V

See notes 1 and 2.
For other voltages, see p.882.

●Double solenoid (semi-standard)

250 **E2** — □ — □ — □ — □

Series | Double solenoid | Number of ports | Wiring type | Energizing type | Voltage

Series

Code	Specifications
250	Port size Rc1/4
2503	Port size Rc3/8

Number of ports[Note 2]

Code	Specifications
Blank	3-port
2	2-port

Wiring type[Note 2]

Code	Specifications
Blank	Conduit
T	With terminal box

Energizing type[Note 2]

Code	Specifications
Blank	Continuously energizing type
D	Momentarily energizing type

Voltage[Note 1]

Code	Specifications
AC100V	AC100V 50/60Hz
AC200V	AC200V 50/60Hz
DC24V	DC24V

See notes 1 and 2.
For other voltages, see p.882.

Example: **250E2**-2-AC100V

●Keep solenoid (semi-standard)

250 **SE2** — □ — □ — □

Series | Keep solenoid | Number of ports | Wiring type | Voltage

Series

Code	Specifications
250	Port size Rc1/4
2503	Port size Rc3/8

Number of ports[Note 2]

Code	Specifications
Blank	3-port
2	2-port

Wiring type[Note 2]

Code	Specifications
Blank	Conduit
T	With terminal box

Voltage[Note 1]

Code	Specifications
AC100V	AC100V 50/60Hz
AC200V	AC200V 50/60Hz

Example: **250SE2**-2-AC100V
2503SE2-AC100V

Notes: 1. Also specify Hz for AC110V and 220V.
2. For the order code, first enter numbers, in order from small to large, and then enter alphabetic characters.
Example: **250E1**-2-11-T-AC100V
2503E1-2-AC100V

Dimensions of Rc1/4, 2-, 3-port (mm)

●Single solenoid (standard type) 250E1

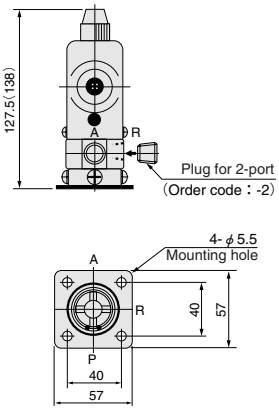

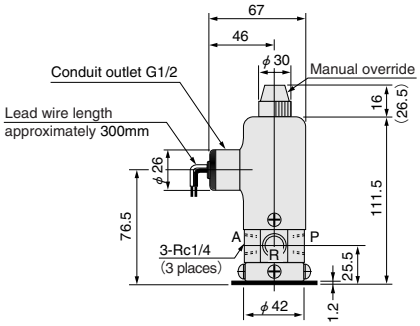

※For wiring instructions, see p.882.

Note: Figures in parentheses ( ) are for the single solenoid with locking type manual override (**-81**).

Dimensions of Rc1/4, 2-, 3-port (mm)

●With terminal box

Single solenoid	250E1-T
Double solenoid	250E2-T
Keep solenoid	250SE2-T

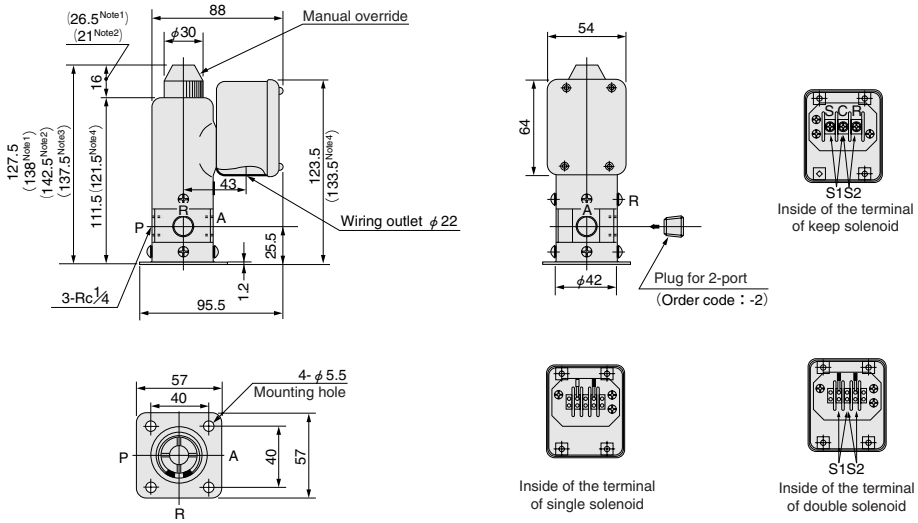

※For wiring instructions, see p.882.

Notes: 1. Figures in parentheses ( ) are for the single solenoid with locking type manual override (-**81**).
2. For double solenoid
3. For keep solenoid
4. For double solenoid and keep solenoid

●Double solenoid (standard type) 250E2
●Keep solenoid (standard type) 250SE2

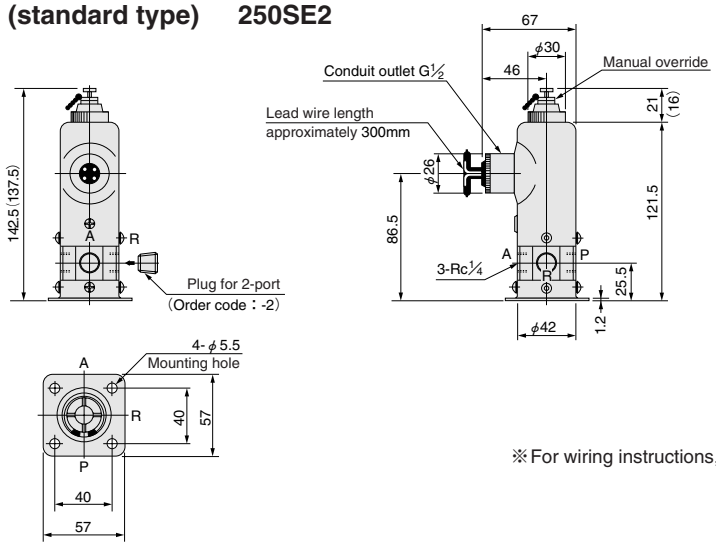

※For wiring instructions, see p.882.

Note: Figures in parentheses ( ) are for the keep solenoid.

Dimensions of Rc3/8, 2-, 3-port (mm)

●Single solenoid (standard type) 2503E1

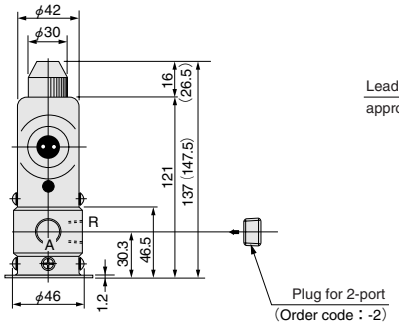

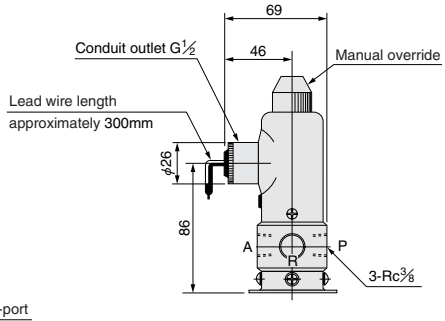

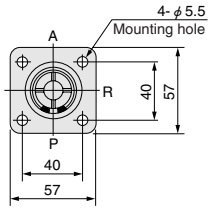

Note: Figures in parentheses ( ) are for the single solenoid with locking type manual override (**-81**).

※For wiring instructions, see p.882.

●With terminal box

Single solenoid	**2503E1-T**
Double solenoid	**2503E2-T**
Keep solenoid	**2503SE2-T**

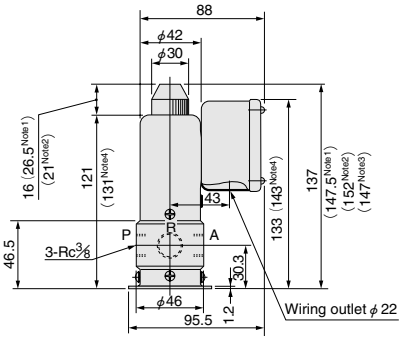

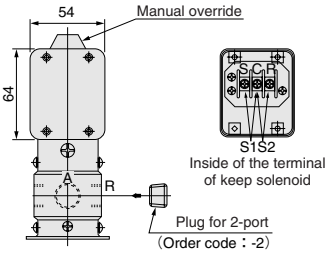

Inside of the terminal of keep solenoid

Inside of the terminal of single solenoid

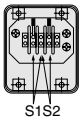

Inside of the terminal of double solenoid

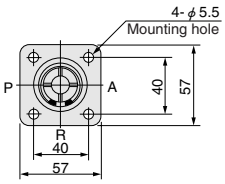

Notes: 1. Figures in parentheses ( ) are for the single solenoid with locking type manual override (**-81**).
2. For double solenoid
3. For keep solenoid
4. For double solenoid and keep solenoid

※For wiring instructions, see p.882.

●Double solenoid (standard type) 2503E2
●Keep solenoid (standard type) 2503SE2

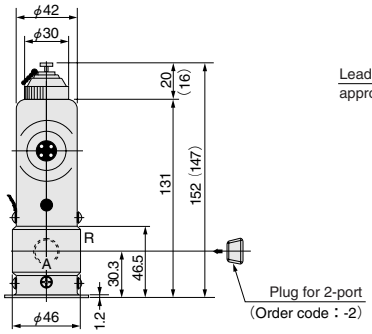

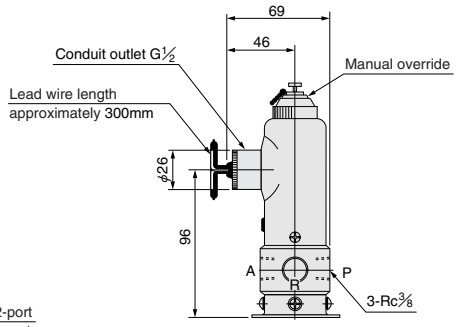

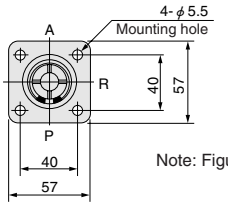

Note: Figures in parentheses ( ) are for the keep solenoid.

※For wiring instructions, see p.882.

5-port Order Codes

●Single solenoid

250—**4E1**—□—□—□

Series | Single solenoid | Manual override | Wiring type | Voltage

Series

Code	Specifications
250	Port size Rc1/4
2503	Port size Rc3/8

Wiring type[Note 2]

Code	Specifications
Blank	Conduit
T	With terminal box

Manual override[Note 2]

Code	Specifications
Blank	Non-locking type
81	Locking type

Voltage[Note 1]

Code	Specifications
AC100V	AC100V 50/60Hz
AC200V	AC200V 50/60Hz
DC24V	DC24V

See notes 1 and 2.
For other voltages, see p.882.

●Double solenoid (semi-standard)

250—**4E2**—□—□—□

Series | Double solenoid | Wiring type | Energizing type | Voltage

Series

Code	Specifications
250	Port size Rc1/4
2503	Port size Rc3/8

Wiring type[Note 2]

Code	Specifications
Blank	Conduit
T	With terminal box

Energizing type[Note 2]

Code	Specifications
Blank	Continuously energizing type
D	Momentarily energizing type

Voltage[Note 1]

Code	Specifications
AC100V	AC100V 50/60Hz
AC200V	AC200V 50/60Hz
DC24V	DC24V

See notes 1 and 2.
For other voltages, see p.882.

Example: **250-4E2**-T-AC100V
2503-4E2-T-AC100V

●Keep solenoid (semi-standard)

250—**4SE2**—□—□

Series | Keep solenoid | Wiring type | Voltage

Series

Code	Specifications
250	Port size Rc1/4
2503	Port size Rc3/8

Wiring type[Note 2]

Code	Specifications
Blank	Conduit
T	With terminal box

Voltage[Note 1]

Code	Specifications
AC100V	AC100V 50/60Hz
AC200V	AC200V 50/60Hz

Example: **250-4SE2**-AC100V
2503-4SE2-AC100V

Notes: 1. Also specify Hz for AC110V and 220V.
2. For the order code, first enter numbers, in order from small to large, and then enter alphabetic characters.
Example: **250-4E1**-AC100V
2503-4E1-81-T-AC100V

Dimensions of 5-port (mm)

●Single solenoid (standard type) 250-4E1 2503-4E1

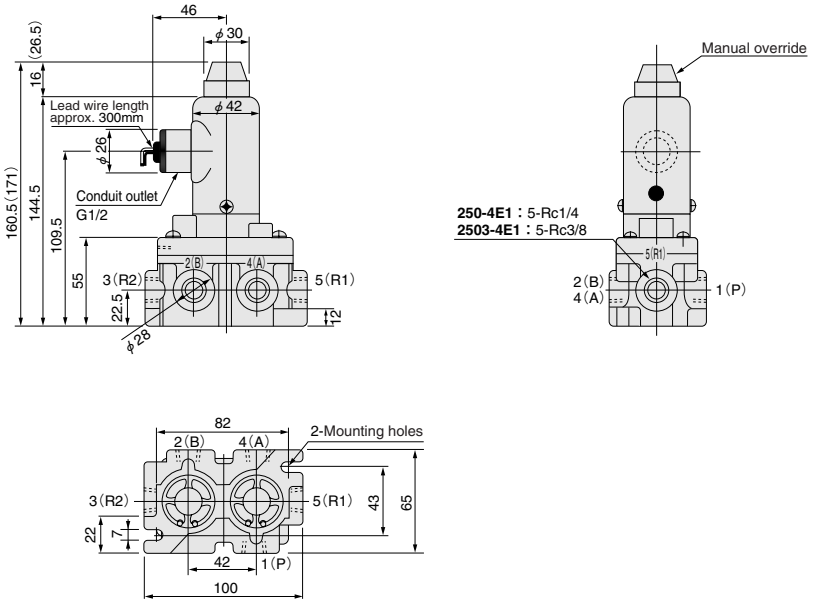

Note: Figures in parentheses ( ) are for the single solenoid with locking type manual override (**-81**).

Dimensions of 5-port (mm)

●With terminal box

Single solenoid	**250-4E1-T**	**2503-4E1-T**
Double solenoid	**250-4E2-T**	**2503-4E2-T**
Keep solenoid	**250-4SE2-T**	**2503-4SE2-T**

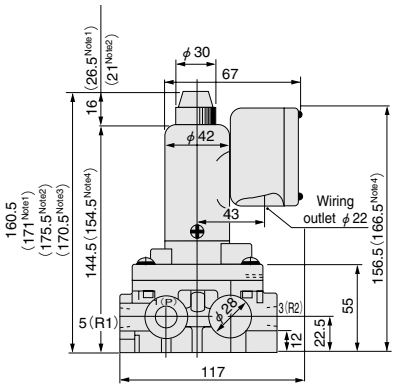

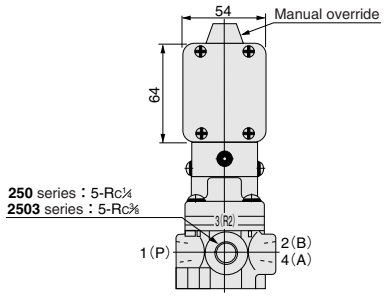

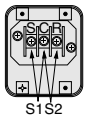

Inside of the terminal of keep solenoid

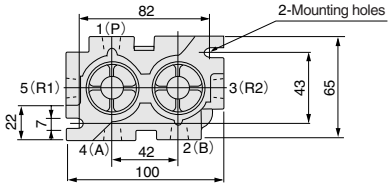

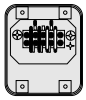

Inside of the terminal of single solenoid

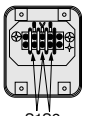

Inside of the terminal of double solenoid

Notes: 1. For the single solenoid with locking type manual override (**-81**).
2. For double solenoid
3. For keep solenoid
4. For double solenoid and keep solenoid

●Double solenoid (standard type) 250-4E2 2503-4E2
●Keep solenoid (standard type) 250-4SE2 2503-4SE2

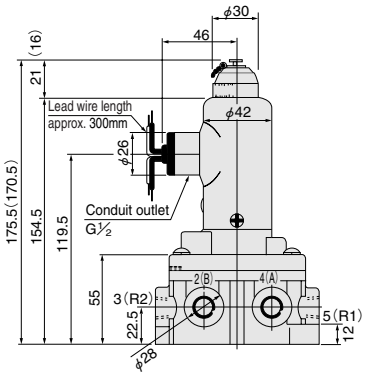

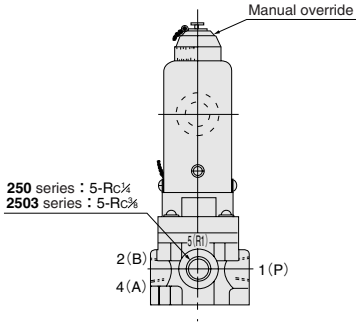

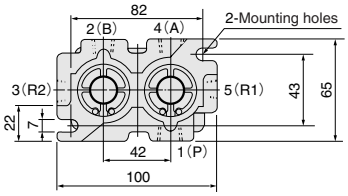

Note: Figures in parentheses ( ) are for the keep solenoid.

SOLENOID VALVES 254 SERIES

Internal pilot type 4-port

Symbols

Single solenoid (**E1**) type	Double solenoid (**E2**) type	Keep solenoid (**SE2**) type
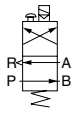	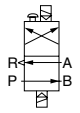	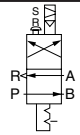
254-4E1	**254-4E2**	**254-4SE2**

Basic Models and Valve Functions

Item / Model	254-4E1	254-4E1-03	254-4E2	254-4E2-03	254-4SE2	254-4SE2-03
Number of positions	2					
Number of ports	4					
Valve function	Single solenoid		Double solenoid		Keep solenoid	

Specifications

Item / Model	254-4E1	254-4E1-03	254-4E2	254-4E2-03	254-4SE2	254-4SE2-03
Media	Air					
Operation type	Internal pilot type					
Effective area〔Cv〕 mm^2	15〔0.76〕					
Port size Rc	1/4	3/8	1/4	3/8	1/4	3/8
Lubrication	Not required					
Operating pressure range MPa {kgf/cm^2} [psi.]	0.1～0.9 {1.0～9.2} [15～131]					
Proof pressure MPa {kgf/cm^2}[psi.]	1.35 {13.8} [196]					
Response time ON/OFF ms — ON	70					
Response time ON/OFF ms — OFF	90					
Maximum operating frequency Hz	5					
Minimum time to energize for self holding ms	—				50	
Operating temperature range (atmosphere and media) °C [°F]	0～60 [32～140]					
Mounting direction	Any					
Mass kg [lb.]	1.1 [2.4]		1.4 [3.1]		1.3 [2.9]	

Solenoid Specifications

Item / Solenoid type	Single solenoid (**E1**)	Double solenoid (**E2**)	Keep solenoid (**SE2**)
Voltage type V	See the Voltage Types and Current.		
Voltage range %	Rated voltage ±10%		Rated voltage +10%, −5%
Current mA	See the Voltage Types and Current.		
Energizing type	Continuously energizing type		Common type for momentarily and continuously energizing
Insulation type	B type (Insulation resistance over 10MΩ)		
Wiring type	Conduit type	With terminal box	
Lead wire length mm [in.]	300 [11.8]		

Major Parts and Materials

Parts	Materials
Body	Aluminum alloy (anodized)
Stem	Brass
Main valve poppet	Synthetic rubber
Seal	

Inner Construction and Major Parts

●Single solenoid (E1) type

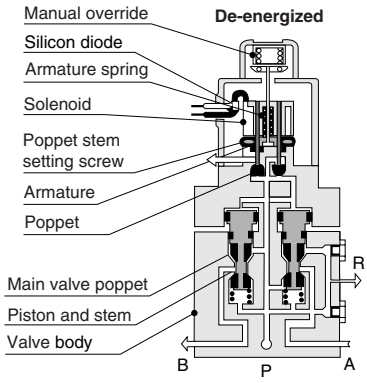

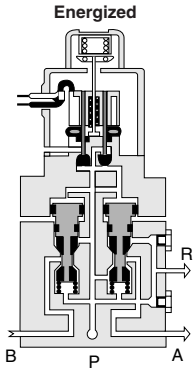

●For keep solenoid (**SE2**) type and double solenoid (**E2**) type, see p.881.

Flow Rate

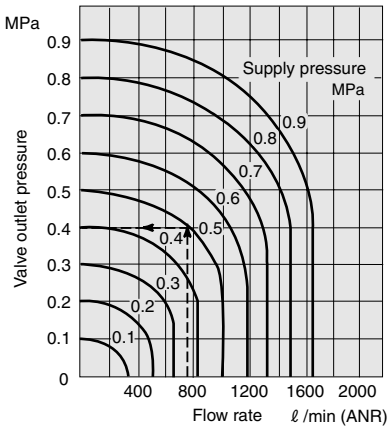

How to read the graph
When the supply pressure is 0.5MPa [73psi.] and the flow rate is 740 ℓ /min [26.1ft³/min.] (ANR), the valve outlet pressure becomes 0.4MPa [58psi.].

1MPa = 145psi., 1 ℓ /min = 0.0353ft³/min.

Order Codes

●Single solenoid

254—4E1—□—□—□—□

Series — Single solenoid — Port size — Wiring type — Option — Voltage

Port size

Code	Specifications
Blank	Rc1/4
03	Rc3/8

Wiring type[Note 2]

Code	Specifications
Blank	Conduit
T	With terminal box

Option[Note 2]

Code	Specifications
70	With speed controller
81	With locking type manual override

Voltage[Note 1]

Code	Specifications
AC100V	AC 100V 50/60Hz
AC200V	AC 200V 50/60Hz
DC24V	DC24V

See notes 1 and 2.
For other voltages, see p.882.

●Double solenoid

254—4E2—□—□—□—□

Series — Double solenoid — Port size — Energizing type — Option — Voltage

Port size

Parts	Specifications
Blank	Rc1/4
03	Rc3/8

Energizing type[Note 2]

Code	Specifications
Blank	Continuously energizing type
D	Momentarily energizing type

Option[Note 2]

Code	Specification
70	With speed controller

Voltage[Note 1]

Parts	Specifications
AC100V	AC 100V 50/60Hz
AC200V	AC 200V 50/60Hz
DC24V	DC24V

See notes 1 and 2.
For other voltages, see p.882.

Example: **254-4E2**-AC100V
254-4E2-03-70-AC100V

●Keep solenoid

254—4SE2—□—□—□

Series — Keep solenoid — Port size — Option — Voltage

Port size

Code	Specifications
Blank	Rc1/4
03	Rc3/8

Option[Note 2]

Code	Specification
70	With speed controller

Voltage[Note 1]

Parts	Specifications
AC100V	AC 100V 50/60Hz
AC200V	AC 200V 50/60Hz

Example: **254-4SE2**-70-AC100V

Notes: 1. Also specify Hz for AC110V and 220V.
2. For the order code, first enter numbers, in order from small to large, and then enter alphabetic characters.

Example: **254-4E1**-70-AC100V
250-4E1-03-70-T-AC100V

Dimensions (mm)

●Single solenoid (standard type) 254-4E1

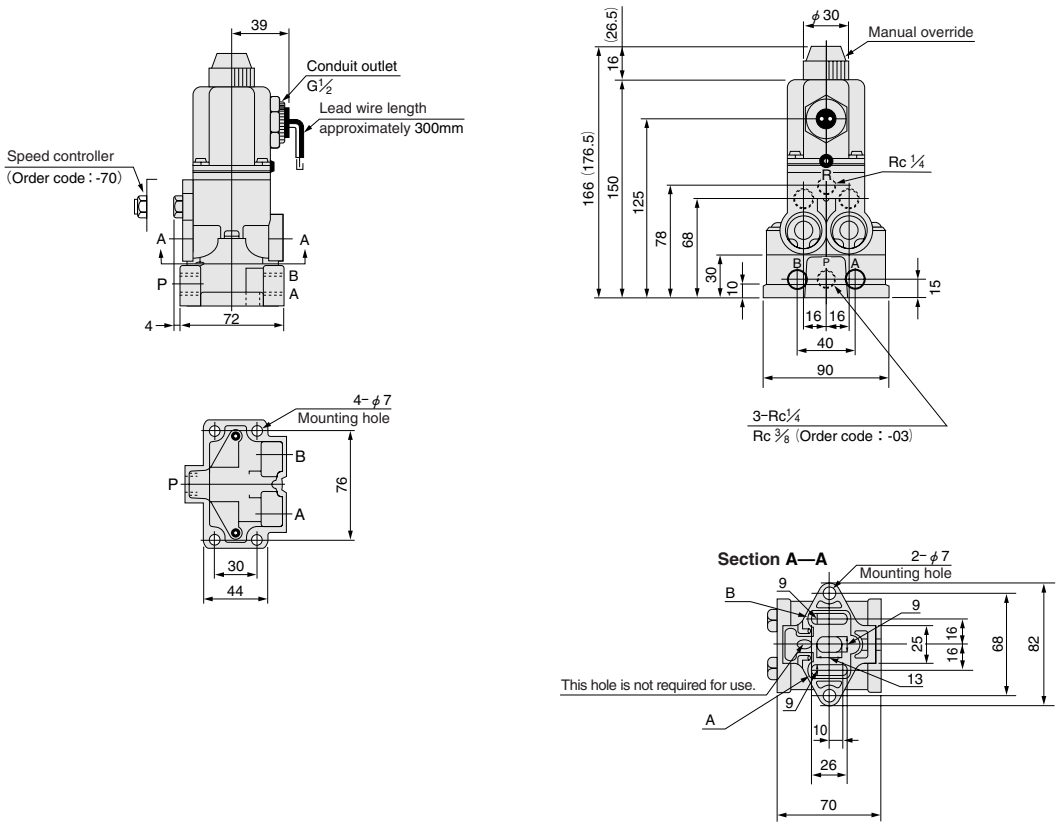

Note: Figures in parentheses ( ) are for the single solenoid with locking type manual override (**-81**).

※For wiring instructions, see p.882.

Dimensions (mm)

●Double solenoid (standard type) 254-4E2
●Keep solenoid (standard type) 254-4SE2
●Single solenoid (with terminal box) 254-4E1-T

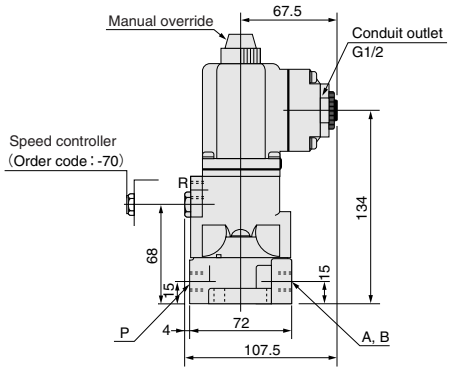

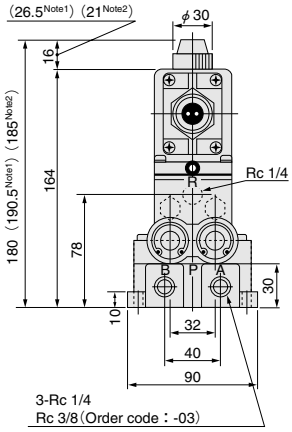

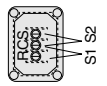

Inside of the terminal of keep solenoid

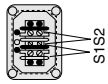

Inside of the terminal of double solenoid

Inside of the terminal of single solenoid

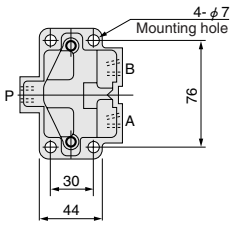

※For wiring instructions, see p.882.

Notes: 1. For the single solenoid with locking type manual override (**-81**).
2. For double solenoid

SOLENOID VALVES 254 SERIES

Manifold

Order Codes

M6 Stn. 1～3 **M254-4E1**-AC100V
Stn. 4 **M254-4E1**-70-AC100V
Stn. 5 **BP**
Stn. 6 **M254-4E1**-AC100V

Number of units — Station — Valve model

●Number of units (number of mounting valves)

Code	Number of units
1	1
2	2
3	3
⋮	⋮
6	6

●Station (valve mounting position)

Code	Details
Stn.1	1st station from the left when facing A, B ports.
Stn.2	2nd station from the left when facing A, B ports.
Stn.3	3rd station from the left when facing A, B ports.
⋮	⋮
Stn.6	6th station from the left when facing A, B ports.

●Valve model

Model
M254-4E1
M254-4SE2
M254-4E2
Block-off plate (Order code: **BP**)

Enter the solenoid valve models required for each station.

Notes: 1. The prefix **M** of each valve model signifies a "solenoid valve for manifolds." Enter **M** to all valves for manifold types. The order code for Slim Cylinder Valpack is **254-4E1-70**.
2. The "block-off plate" is used to close unused stations.

Major Parts and Materials

Parts	Materials
Base	Aluminum alloy (anodized)
Block-off plate	Aluminum alloy (anodized)

Manifold Mass (with valves)

kg [lb.]

Mounting valve model / Manifold model	Solenoid valves			Air-piloted valves
	Single solenoid **M254-4E1**	Double solenoid **M254-4E2**	Keep solenoid **M254-4SE2**	**M254-4A** **M254-4AA**
M2	2.8 [6.2]	3.3 [7.3]	3.1 [6.8]	2.2 [4.9]
M3	4.2 [9.3]	4.9 [10.8]	4.6 [10.1]	3.3 [7.3]
M4	5.6 [12.3]	6.5 [14.3]	6.1 [13.5]	4.4 [9.7]
M5	7.0 [15.4]	8.1 [17.9]	7.6 [16.8]	5.5 [12.1]
M6	8.4 [18.5]	9.7 [21.4]	9.1 [20.1]	6.6 [14.6]
Single valve	0.9 [2.0]	1.2 [2.6]	1.1 [2.4]	0.6 [1.3]

Dimensions (mm)

Unit dimensions

Model	L
M2	175
M3	260
M4	345
M5	430
M6	515

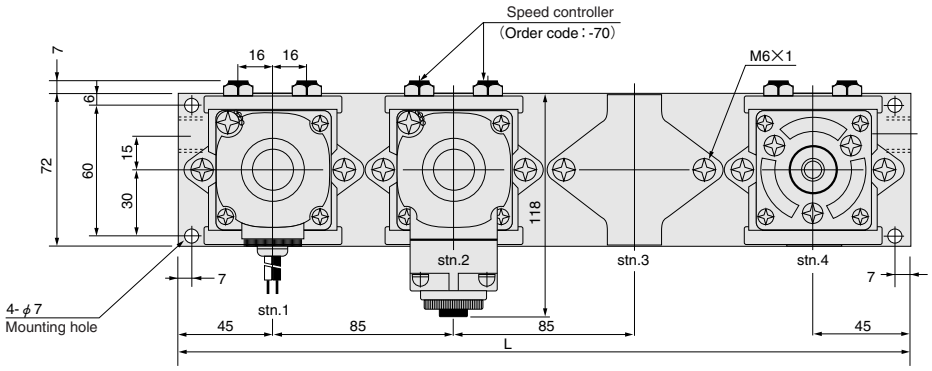

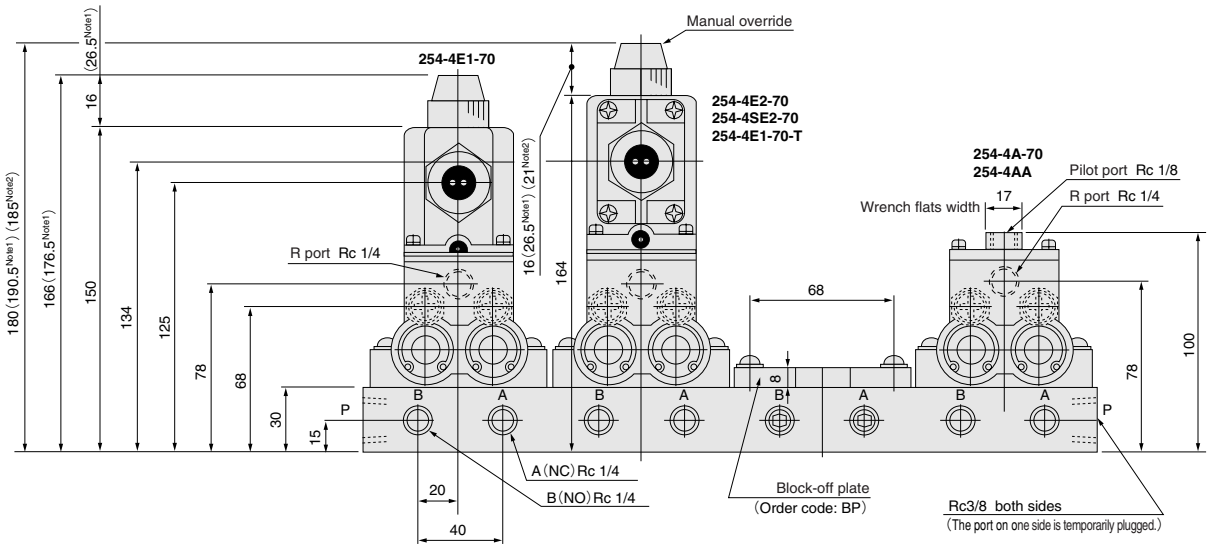

Notes: 1. For the single solenoid with locking type manual override (**-81**)
2. For double solenoid

※For wiring instructions, see p.882.

SOLENOID VALVES 375, 501 SERIES

Internal pilot type 2-, 3-, 4-port
Rc1/2, Rc3/8

Symbols

Single solenoid (**E1**) type					Double solenoid (**E2**) type			Keep solenoid (**SE2**) type
2-port		3-port		4-port	2-port	3-port	4-port	4-port
NC	NO	NC	NO	——	NC/NO	NC/NO	——	——
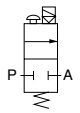	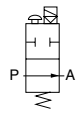	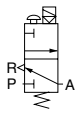	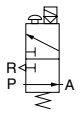	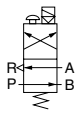	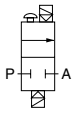	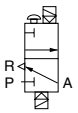	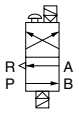	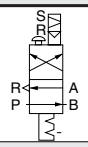
375E1-2 **501E1-2**	**375E1-2-11** **501E1-2-11**	**375E1** **501E1**	**375E1-11** **501E1-11**	**375-4E1** **501-4E1**	**375E2-2** **501E2-2**	**375E2** **501E2**	**375-4E2** **501-4E2**	**375-4SE2** **501-4SE2**

Basic Models and Valve Functions

Item \ Model	375E1-2 501E1-2	375E1-2-11 501E1-2-11	375E1 501E1	375E1-11 501E1-11	375-4E1 501-4E1	375E2-2 501E2-2	375E2 501E2	375-4E2 501-4E2	375-4SE2 501-4SE2
Number of positions	2								
Number of ports	2		3		4	2	3	4	4
Valve function	Single solenoid					Double solenoid			Keep solenoid
	Normally closed (NC, standard)	Normally open (NO, optional)	Normally closed (NC, standard)	Normally open (NO, optional)	——	Normally closed (NC) or Normally open (NO)		——	——

Specifications

Item \ Model	375E1-2 501E1-2	375E1-2-11 501E1-2-11	375E1 501E1	375E1-11 501E1-11	375-4E1 501-4E1	375E2-2 501E2-2	375E2 501E2	375-4E2 501-4E2	375-4SE2 501-4SE2
Media	Air								
Operation type	Internal pilot type								
Effective area〔Cv〕 mm²	70〔3.5〕				50〔2.5〕	70〔3.5〕		50〔2.5〕	50〔2.5〕
Port size Rc 375 □	3/8								
Port size Rc 501 □	1/2								
Lubrication	Required (Turbine Oil Class 1 (ISO VG32) or equivalent)								
Operating pressure range MPa {kgf/cm²} [psi.]	0.1～0.9 {1.0～9.2} [15～131]								
Proof pressure MPa {kgf/cm²} [psi.]	1.35 {13.8} [196]								
Response time ON/OFF ms Horizontal direction	30				70	30		70	70
Response time ON/OFF ms Vertical direction	60				90	60		90	90
Maximum operating frequency Hz	5								
Minimum time to energize for self holding ms	—								50
Operating temperature range (atmosphere and media) °C [°F]	0～60 [32～140]								
Mounting direction	Any								
Mass kg [lb.]	0.9 [2.0]				1.3 [2.9]	1.0 [2.2]		1.4 [3.1]	1.3 [2.9]

Solenoid Specifications

Item \ Solenoid type	Single solenoid (E1)	Double solenoid (E2)	Keep solenoid (SE2)
Voltage type V	See the Voltage Types and Current.		
Voltage range %	Rated voltage ±10%		Rated voltage +10%, −5%
Current mA	See the Voltage Types and Current.		
Energizing type	Continuously energizing type	Continuously energizing type	Common type for momentarily and continuously energizing
Insulation type	B type (Insulation resistance over 10MΩ)		
Wiring type	Conduit type		
Lead wire length mm [in.]	300 [11.8]		

Inner Construction, Major Parts and Materials

●2-, 3-port

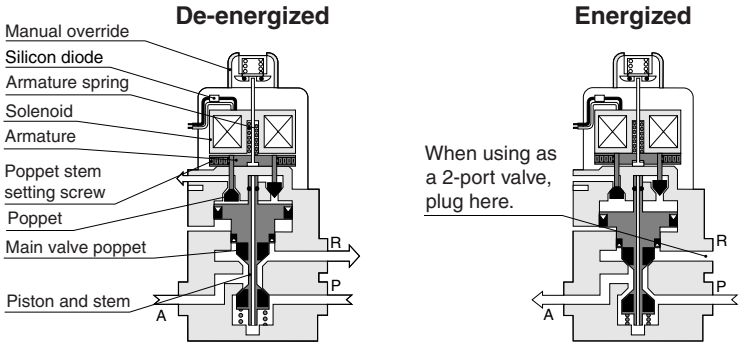

●For keep solenoid (**SE2**) type and double solenoid (**E2**) type, see p.881.

●4-port

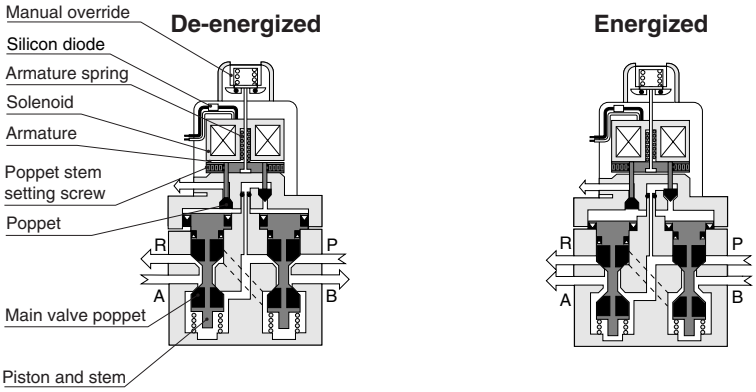

●For keep solenoid (**SE2**) type and double solenoid (**E2**) type, see p.881.

Parts	Materials
Body	Aluminum alloy (anodized)
Stem	Brass
Main valve poppet	Synthetic rubber
Seal	

Flow Rate

●2-, 3-port

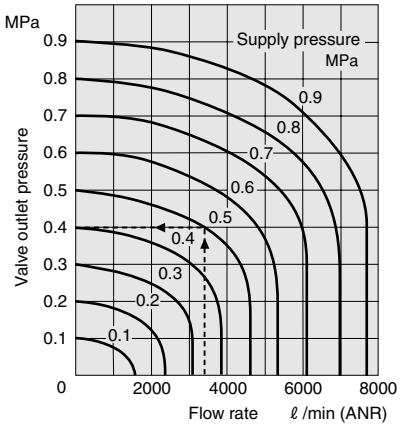

How to read the graph
When the supply pressure is 0.5MPa [73psi.] and the flow rate is 3500 ℓ/min [124ft³/min.] (ANR), the valve outlet pressure becomes 0.4MPa [58psi.].

1MPa = 145psi., 1 ℓ/min = 0.0353ft³/min.

●4-port

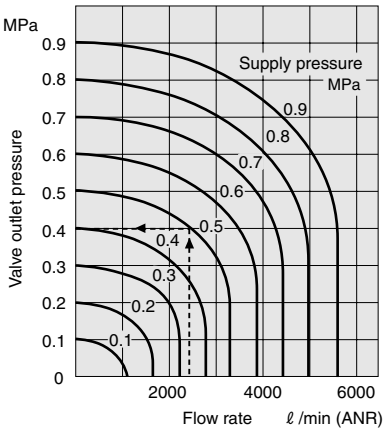

How to read the graph
When the supply pressure is 0.5MPa [73psi.] and the flow rate is 2500 ℓ/min [88.3ft³/min.] (ANR), the valve outlet pressure becomes 0.4MPa [58psi.].

1MPa = 145psi., 1 ℓ/min = 0.0353ft³/min.

2-, 3-port Order Codes

●Single solenoid

□E1—□—□—□—□—□

Series — Single solenoid — Number of ports — Valve function — Manual override — Wiring type — Voltage

Series

Code	Specifications
375	Port size Rc3/8
501	Port size Rc1/2

Number of ports[Note 2]

Code	Specifications
Blank	3-port
2	2-port

Valve function[Note 2]

Code	Specifications
Blank	NC (Normally closed)
11	NO (Normally open)

Manual override[Note 2]

Code	Specifications
Blank	Non-locking type
81	Locking type

Wiring type[Note 2]

Code	Specifications
Blank	Conduit
T	With terminal box

Voltage[Note 1]

Code	Specifications
AC100V	AC100V 50/60Hz
AC200V	AC200V 50/60Hz
DC24V	DC24V

See notes 1 and 2.
For other voltages, see p.882.

Example: **375E1**-2-11-T-AC100V
501E1-2-AC100V

●Double solenoid

□E2—□—□—□—□

Series — Double solenoid — Number of ports — Wiring type — Energizing type — Voltage

Series

Code	Specifications
375	Port size Rc3/8
501	Port size Rc1/2

Number of ports[Note 2]

Code	Specifications
Blank	3-port
2	2-port

Wiring type[Note 2]

Code	Specifications
Blank	Conduit
T	With terminal box

Energizing type[Note 2]

Code	Specifications
Blank	Continuously energizing type
D	Momentarily energizing type

Voltage[Note 1]

Code	Specifications
AC100V	AC100V 50/60Hz
AC200V	AC200V 50/60Hz
DC24V	DC24V

See notes 1 and 2.
For other voltages, see p.882.

Example: **375E2**-2-AC100V
501E2-T-AC100V

Notes: 1. Also specify Hz for AC110V and 220V.
2. For the code, first enter numbers, in order from small to large, and then enter alphabetic characters.

Dimensions of 2-, 3-port (mm)

●Single solenoid (standard type) 375E1 501E1

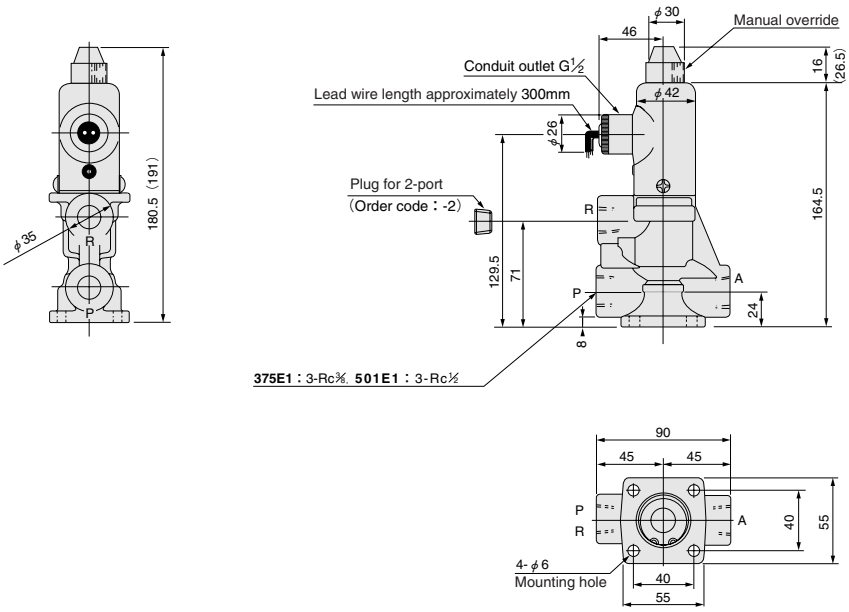

Note: Figures in parentheses ( ) are for the single solenoid with locking type manual override (**-81**).

Dimensions of 2-, 3-port (mm)

●With terminal box (Single solenoid 375E1-T 501E1-T / Double solenoid 375E2-T 501E2-T)

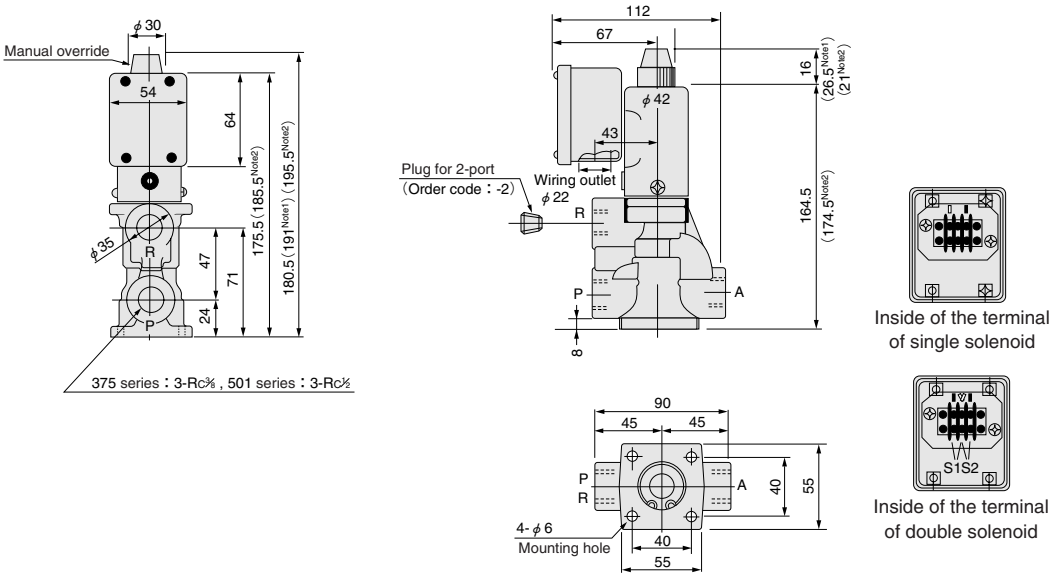

Notes: 1. For the single solenoid with locking type manual override (-**81**)
2. For double solenoid

※For wiring instructions, see p.882.

●Double solenoid (standard type) 375E2 501E2

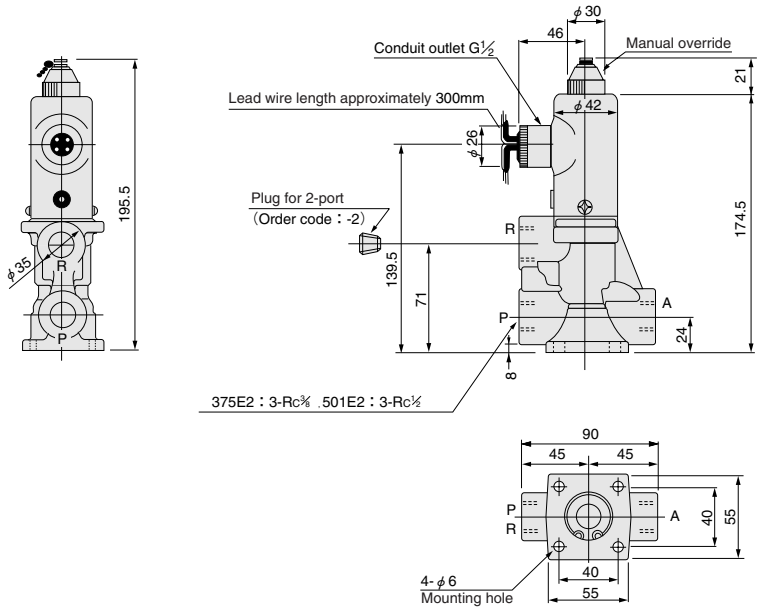

※For wiring instructions, see p.882.

4-port Order Codes

●Single solenoid

□ — **4E1** — □ — □ — □

Series | Single solenoid | Manual override | Wiring type | Voltage

Series

Code	Specifications
375	Port size Rc3/8
501	Port size Rc1/2

Manual override[Note 1]

Code	Specifications
Blank	Non-locking type
81	Locking type

Wiring type[Note 1]

Code	Specifications
Blank	Conduit
T	With terminal box

Voltage[Note 2]

Code	Specifications
AC100V	AC100V 50/60Hz
AC200V	AC200V 50/60Hz
DC24V	DC24V

See notes 1 and 2.
For other voltages, see p.882.
Example: **375-4E1**-2-AC100V
501-4E1-11-AC100V

●Double solenoid

□ — **4E2** — □ — □ — □

Series | Double solenoid | Wiring type | Energizing type | Voltage

Series

Code	Specifications
375	Port size Rc3/8
501	Port size Rc1/2

Wiring type[Note 1]

Code	Specifications
Blank	Conduit
T	With terminal box

Energizing type[Note 1]

Code	Specifications
Blank	Continuously energizing type
D	Momentarily energizing type

Voltage[Note 2]

Code	Specifications
AC100V	AC100V 50/60Hz
AC200V	AC200V 50/60Hz
DC24V	DC24V

See notes 1 and 2.
For other voltages, see p.882.
Example: **375-4E2**-2-AC100V
501-4E2-T-AC100V

●Keep solenoid (semi-standard)

□ — **4SE2** — □ — □

Series | Keep solenoid | Wiring type | Voltage

Series

Code	Specifications
375	Port size Rc3/8
501	Port size Rc1/2

Wiring type[Note 1]

Code	Specifications
Blank	Conduit
T	With terminal box

Voltage[Note 2]

Code	Specifications
AC100V	AC100V 50/60Hz
AC200V	AC200V 50/60Hz

Example: **375-4SE2**-AC100V
501-4SE2-AC100V

Notes: 1. Also specify Hz for AC110V and 220V.
2. For the order code, first enter numbers, in order from small to large, and then enter alphabetic characters.

Dimensions of 4-port (mm)

●Single solenoid (standard type) 375-4E1 501-4E1

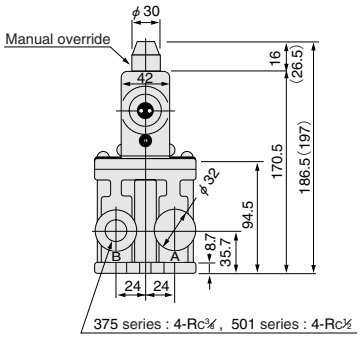

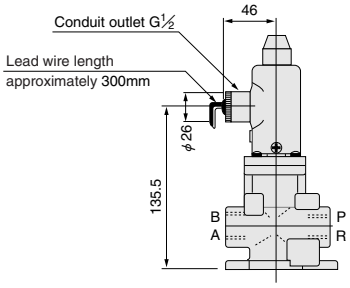

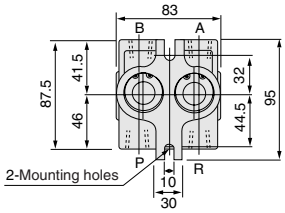

Note: Figures in parentheses ( ) are for the single solenoid with locking type manual override (**-81**).

Dimensions of 4-port (mm)

●With terminal box

Single solenoid	375-4E1-T	501-4E1-T
Double solenoid	375-4E2-T	501-4E2-T
Keep solenoid	375-4SE2-T	501-4SE2-T

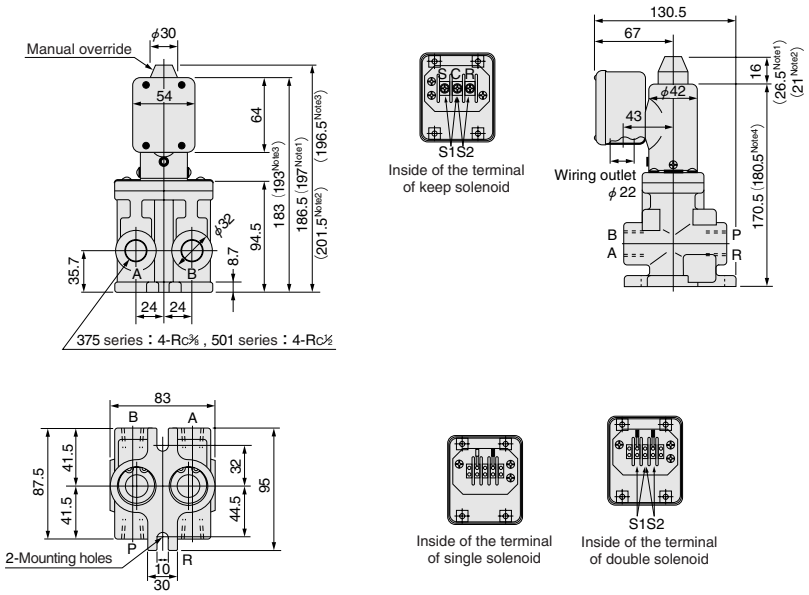

Notes: 1. For the single solenoid with locking type manual override (**-81**)
2. For double solenoid
3. For keep solenoid
4. For double solenoid and keep solenoid

※For wiring instructions, see p.882.

●Double solenoid (standard type) 375-4E2 501-4E2
●Keep solenoid (standard type) 375-4SE2 501-4SE2

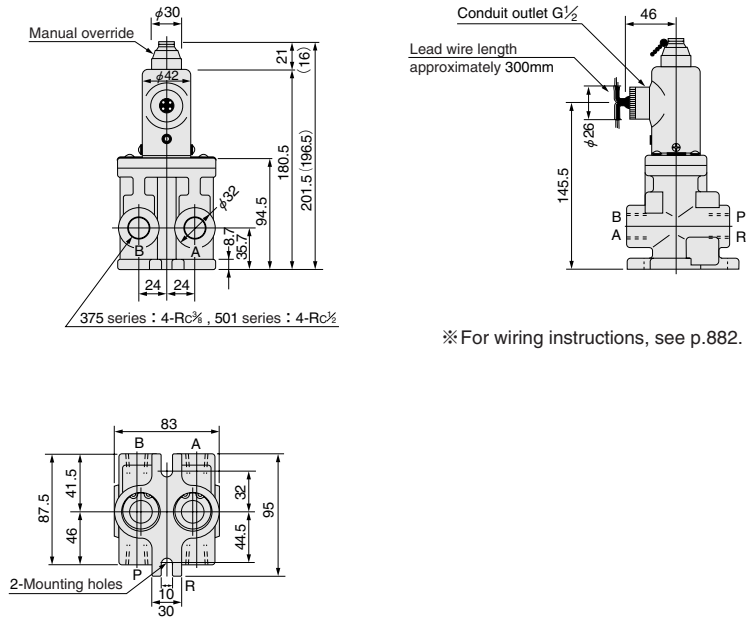

※For wiring instructions, see p.882.

Note: Figures in parentheses ( ) are for the keep solenoid.

SOLENOID VALVES 750 SERIES

Internal pilot type 2-,3-, 4-port Rc3/4

Symbols

Single solenoid (E1) type				
2-port		3-port		4-port
NC	NO	NC	NO	———
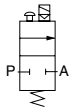	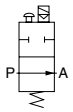	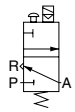	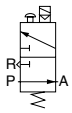	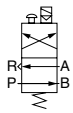
750E1-2	**750E1-2-11**	**750E1**	**750E1-11**	**750-4E1**

Basic Models and Valve Functions

Item \ Model	750E1-2	750E1-2-11	750E1	750E1-11	750-4E1
Number of positions	2				
Number of ports	2		3		4
Valve function	Single solenoid				
	Normally closed (NC, standard)	Normally open (NO, optional)	Normally closed (NC, standard)	Normally open (NO, optional)	———

Specifications

Item \ Model		750E1-2	750E1-2-11	750E1	750E1-11	750-4E1
Media		Air				
Operation type		Internal pilot type				
Effective area〔Cv〕	mm^2	140〔7.0〕				100〔5.0〕
Port size	Rc	3/4				
Lubrication		Required (Turbine Oil Class 1 (ISO VG32) or equivalent)				
Operating pressure range	MPa {kgf/cm^2} [psi.]	0.1～0.9 {1.0～9.2} [15～131]				
Proof pressure	MPa {kgf/cm^2} [psi.]	1.35 {13.8} [196]				
Response time ON/OFF	ms ON	60				140
	ms OFF	120				140
Maximum operating frequency	Hz	3				
Minimum time to energize for self holding	ms	—				
Operating temperature range (atmosphere and media)	°C [°F]	0～60 [32～140]				
Mounting direction		Any				
Mass	kg [lb.]	2.0 [4.4]				3.5 [7.7]

Solenoid Specifications

Item \ Solenoid type		Single solenoid (E1)
Voltage type	V	See the Voltage Types and Current.
Voltage range	%	Rated voltage ±10%
Current	mA	See the Voltage Types and Current.
Energizing type		Continuously energizing type
Insulation type		B type (Insulation resistance over 10MΩ)
Wiring type		Terminal connection
Lead wire length	mm	———

Inner Construction, Major Parts and Materials

●2-, 3-port

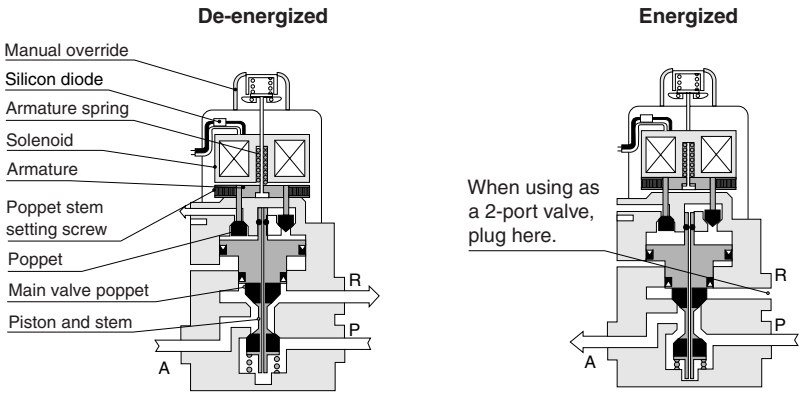

●4-port

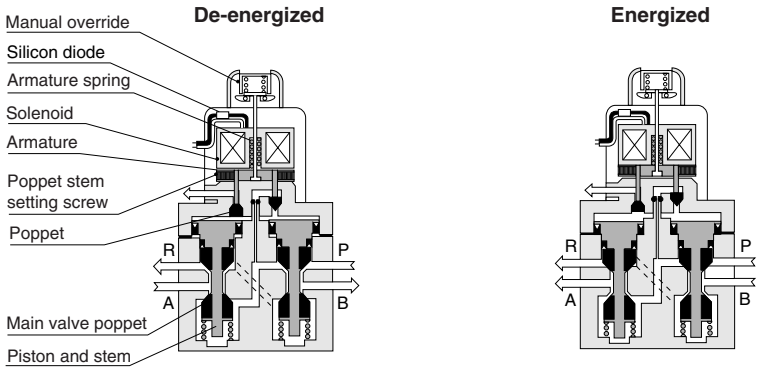

Parts	Materials
Body	Aluminum alloy (anodized)
Stem	Brass
Main valve poppet	Synthetic rubber
Seal	

Flow Rate

●2-, 3-port

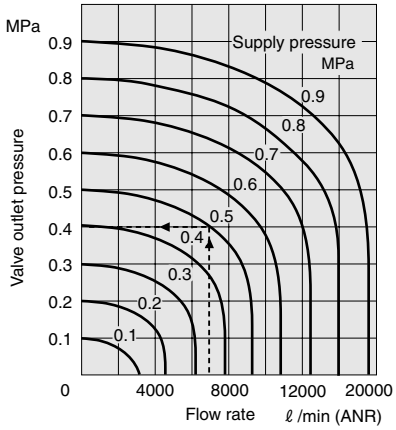

How to read the graph
When the supply pressure is 0.5MPa [73psi.] and the flow rate is 7000 ℓ /min [247ft³/min.] (ANR), the valve outlet pressure becomes 0.4MPa [58psi.].

1MPa = 145psi., 1 ℓ /min = 0.0353ft³/min.

●4-port

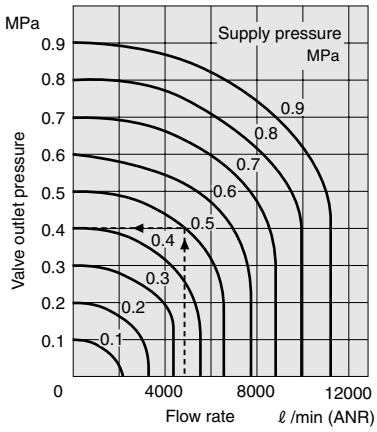

How to read the graph
When the supply pressure is 0.5MPa [73psi.] and the flow rate is 4900 ℓ /min [173ft³/min.] (ANR), the valve outlet pressure becomes 0.4MPa [58psi.].

1MPa = 145psi., 1 ℓ /min = 0.0353ft³/min.

2-, 3-port Order Codes

●Single solenoid

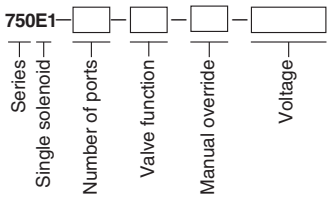

Number of ports

Code	Specifications
Blank	3-port
2	2-port

Valve function[Note 2]

Code	Specifications
Blank	NC (normally closed)
11	NO (normally open)

Manual override[Note 2]

Code	Specifications
Blank	Non-locking type
81	Locking type

Voltage[Note 1]

Code	Specifications
AC100V	AC100V 50/60Hz
AC200V	AC200V 50/60Hz
DC24V	DC24V

Notes: 1. Also specify Hz for AC110V and 220V.
For other voltages, see the on p.882.
2. For the order code, first enter numbers, in order from small to large, and then enter alphabetic characters.

Example: **750E1**-AC100V
750E1-2-11-AC100V

Dimensions of 2-, 3-port (mm)

●Single solenoid (standard type) 750E1

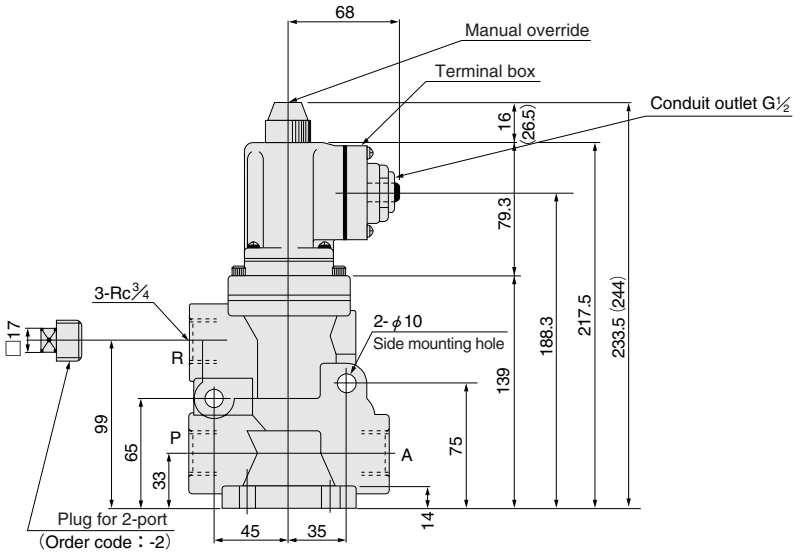

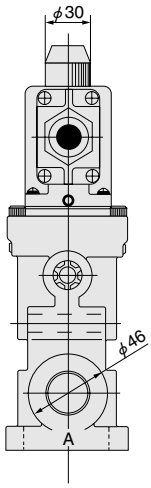

Inside of the terminal

※For wiring instructions, see p.882.

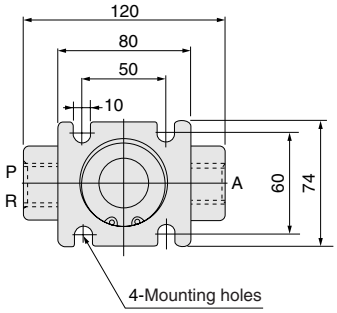

Note: Figures in parentheses ( ) are for the single solenoid with locking type manual override (**-81**).

4-port Order Codes

●Single solenoid

750—**4E1**— □ — □

Series — Single solenoid — Manual override — Voltage

Manual override

Code	Specifications
Blank	Non-locking type
81	Locking type

Voltage

Code	Specifications
AC100V	AC100V 50/60Hz
AC200V	AC200V 50/60Hz
DC24V	DC24V

Note: Also specify Hz for AC110V and 220V.
For other voltages, see the on p.882.

Example: **750-4E1**-AC100V

Dimensions of 4-port (mm)

●Single solenoid (standard type) 750-4E1

Inside of the terminal

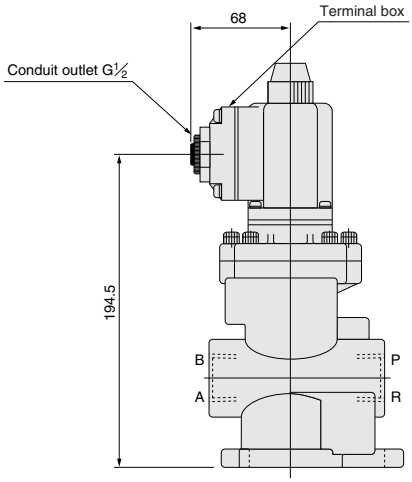

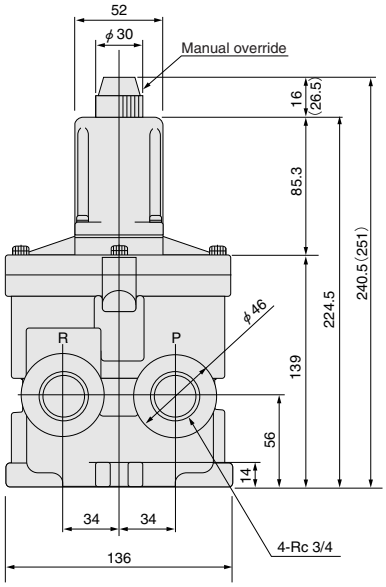

※For wiring instructions, see p.882.

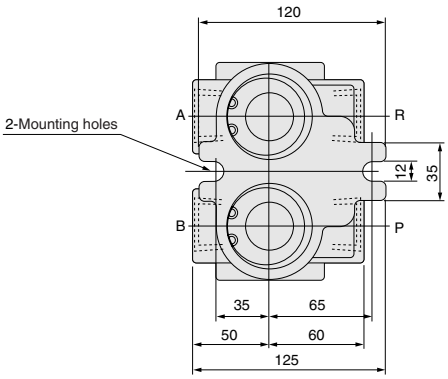

Note: Figures in parentheses ( ) are for the single solenoid with locking type manual override (**-81**).

SOLENOID VALVES 1000, 1250 SERIES

Internal pilot type 2-, 3-, 4-port Rc1, Rc1 1/4

Symbols

Single solenoid (**E1**) type				
2-port		3-port		4-port
NC	NO	NC	NO	———
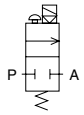	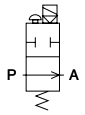	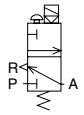	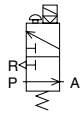	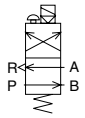
1000E1-2 **1250E1-2**	**1000E1-2-11** **1250E1-2-11**	**1000E1** **1250E1**	**1000E1-11** **1250E1-11**	**1000-4E1** **1250-4E1**

Basic Models and Valve Functions

Item \ Model	**1000E1-2** **1250E1-2**	**1000E1-2-11** **1250E1-2-11**	**1000E1** **1250E1**	**1000E1-11** **1250E1-11**	**1000-4E1** **1250-4E1**
Number of positions	2				
Number of ports	2		3		4
Valve function	Single solenoid				
	Normally closed (NC, standard)	Normally open (NO, optional)	Normally closed (NC, standard)	Normally open (NO, optional)	———

Specifications

Item \ Model		**1000E1-2** **1250E1-2**	**1000E1-2-11** **1250E1-2-11**	**1000E1** **1250E1**	**1000E1-11** **1250E1-11**	**1000-4E1** **1250-4E1**
Media		Air				
Operation type		Internal pilot type				
Effective area〔Cv〕	mm²	280〔14〕				240〔12〕
Port size Rc	1000□	1	1	1	1	1
	1250□	1 1/4	1 1/4	1 1/4	1 1/4	1 1/4
Lubrication		Required (Turbine Oil Class 1 (ISO VG32) or equivalent)				
Operating pressure range	MPa {kgf/cm²} [psi.]	0.1～0.9 {1.0～9.2} [15～131]				
Proof pressure	MPa {kgf/cm²} [psi.]	1.35 {13.8} [196]				
Response time ON/OFF	ms ON	60				160
	ms OFF	140				160
Maximum operating frequency	Hz	2				
Minimum time to energize for self holding	ms	—				
Operating temperature range (atmosphere and media)	°C [°F]	0～60 [32～140]				
Mounting direction		Any				
Mass	kg [lb.]	3.5 [7.7]				5.5 [12.1]

Solenoid Specifications

Item \ Solenoid type		Single solenoid (**E1**)
Voltage type	V	See the Voltage Types and Current.
Voltage range	%	Rated voltage ±10%
Current	mA	See the Voltage Types and Current.
Energizing type		Continuously energizing type
Insulation type		B type (Insulation resistance over 10MΩ)
Wiring type		Terminal connection
Lead wire length	mm	———

Inner Construction, Major Parts and Materials

●2-, 3-port

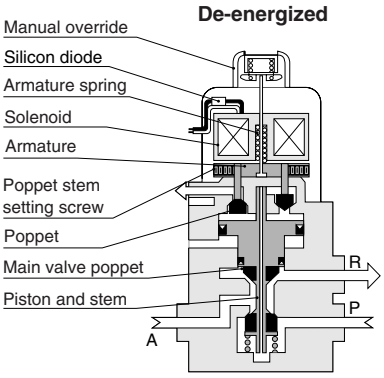

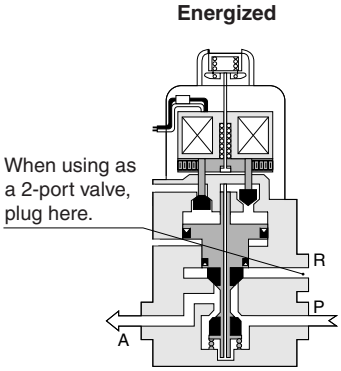

●4-port

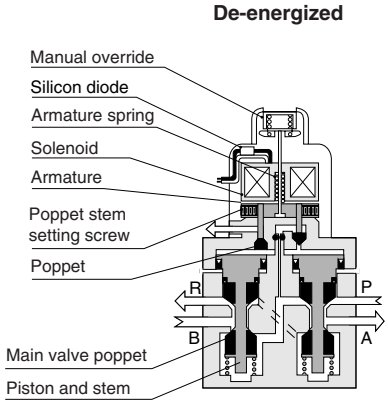

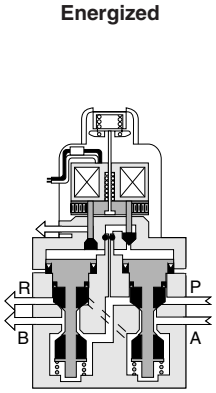

Parts	Materials
Body	Aluminum alloy (anodized)
Stem	Brass
Main valve poppet	Synthetic rubber
Seal	

Flow Rate

●2-, 3-port

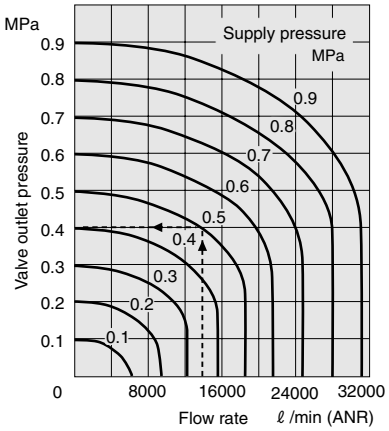

How to read the graph
When the supply pressure is 0.5MPa [73psi.] and the flow rate is 13900 ℓ /min [491ft³/min.] (ANR), the valve outlet pressure becomes 0.4MPa [58psi.].

1MPa = 145psi., 1 ℓ /min = 0.0353ft³/min.

●4-port

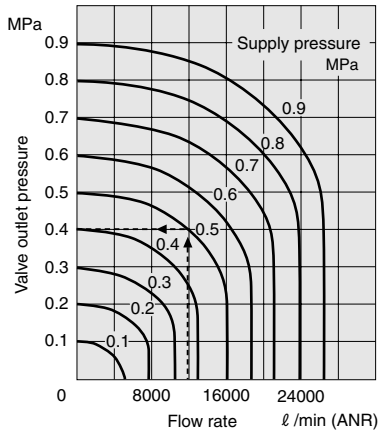

How to read the graph
When the supply pressure is 0.5MPa [73psi.] and the flow rate is 12000 ℓ /min [424ft³/min.] (ANR), the valve outlet pressure becomes 0.4MPa [58psi.].

1MPa = 145psi., 1 ℓ /min = 0.0353ft³/min.

2-, 3-port Order Codes

●Single solenoid

□□E1–□–□–□–□

Series – Single solenoid – Number of ports – Valve function – Manual override – Voltage

Series

Code	Specifications
1000	Port size Rc1
1250	Port size Rc1 1/4

Number of ports[Note 1]

Code	Specifications
Blank	3-port
2	2-port

Valve function[Note 1]

Code	Specifications
Blank	NC (normally closed)
11	NO (normally open)

Manual override[Note 1]

Code	Specifications
Blank	Non-locking type
81	Locking type

Voltage[Note 2]

Code	Specifications
AC100V	AC100V 50/60Hz
AC200V	AC200V 50/60Hz
DC24V	DC24V

See notes 1 and 2.
For other voltages, see p.882.

Notes: 1. Also specify Hz for AC110V and 220V.
2. For the order code, first enter numbers, in order from small to large, and then enter alphabetic characters.

Example: **1000E1**-AC100V
1250E1-2-11-AC100V

Dimensions of 2-, 3-port (mm)

●Single solenoid (standard type) 1000E1 1250E1

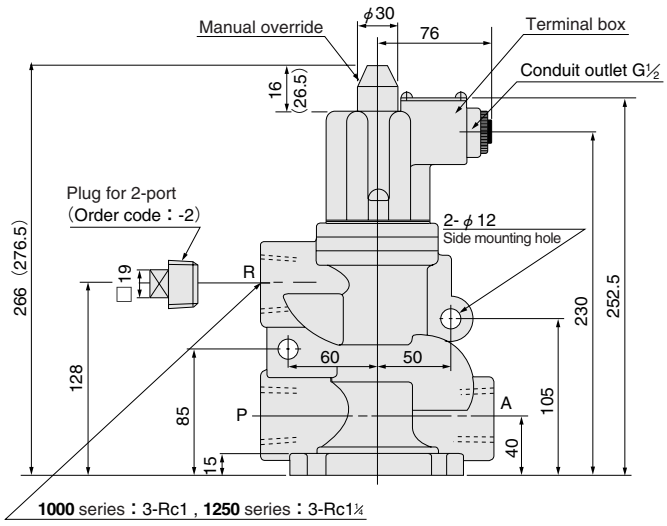

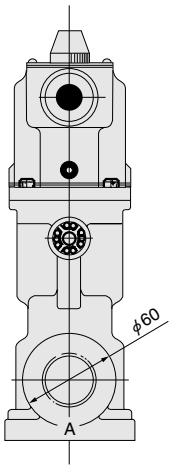

Inside of the terminal

※For wiring instructions, see p.882.

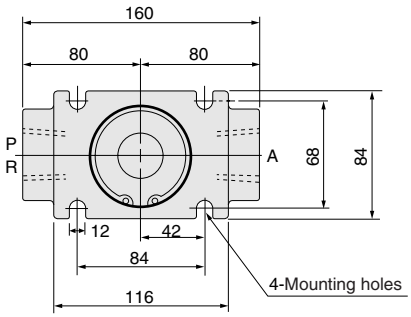

Note: Figures in parentheses ( ) are for the single solenoid with locking type manual override (**-81**).

4-port Order Codes

●Single solenoid

□□—4E1—□—□

Series — Single solenoid — Manual override — Voltage

Series

Code	Specifications
1000	Port size Rc1
1250	Port size Rc1 1/4

Manual override

Code	Specifications
Blank	Non-locking type
81	Locking type

Voltage

Code	Specifications
AC100V	AC100V 50/60Hz
AC200V	AC200V 50/60Hz
DC24V	DC24V

See note.
For other voltages, see p.882.

Note: Also specify Hz for AC110V and 220V.
For other voltages, see p.882.

Example: **1000-4E1**-AC100V
1250-4E1-AC100V

Dimensions of 4-port (mm)

●Single solenoid (standard type) 1000-4E1 1250-4E1

Inside of the terminal

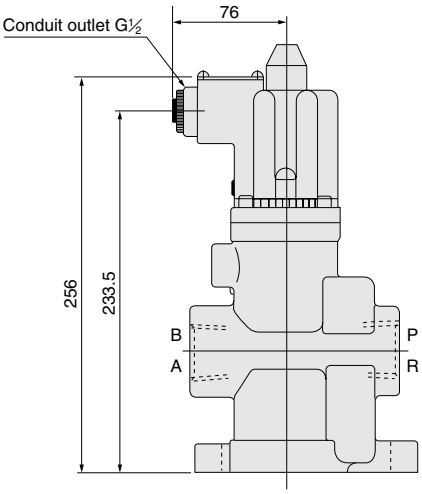

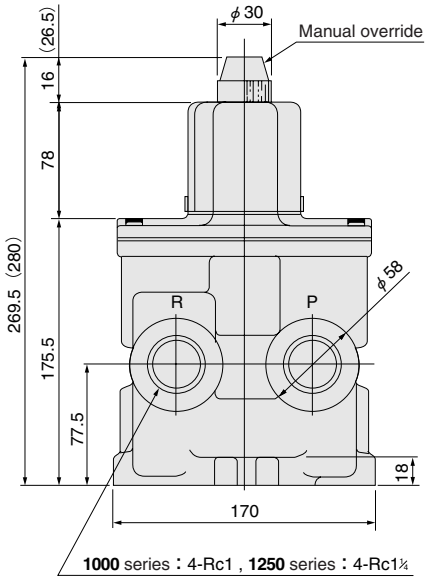

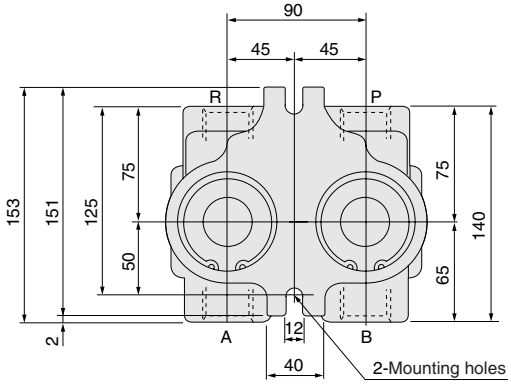

Note: Figures in parentheses ( ) are for the single solenoid with locking type manual override (**-81**).

3-position Solenoid Valves

Internal pilot type 4-port

Symbols

Closed center	Exhaust center
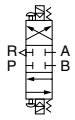	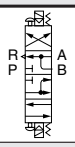
253-4E2 **503-4E2** **753-4E2**	**253-4E2-13** **503-4E2-13**

Basic Models and Valve Functions

Item \ Model	253-4E2	253-4E2-03	503-4E2	503-4E2-03	503-4E2-06	753-4E2	753-4E2-08
Number of positions	3						
Number of ports	4						
Valve function	Double solenoid						

Specifications

Item \ Model		253-4E2	253-4E2-03	503-4E2	503-4E2-03	503-4E2-06	753-4E2	753-4E2-08
Media		Air						
Operation type		Internal pilot type						
Effective area〔Cv〕	mm^2	15〔0.76〕		50〔2.5〕			100〔5.0〕	
Port size	Rc	1/4	3/8	1/2	3/8	3/4		1
Lubrication		Required (Turbine Oil Class 1 (ISO VG32) or equivalent)						
Operating pressure range	MPa {kgf/cm^2} [psi.]	0.1～0.9 {1.0～9.2} [15～131]		0.2～0.9 {2.0～9.2} [29～131]				
Proof pressure	MPa {kgf/cm^2} [psi.]	1.35 {13.8} [196]						
Response time ON/OFF	ms ON	70					140	
	ms OFF	70					140	
Maximum operating frequency	Hz	5						
Minimum time to energize for self holding	ms	—						
Operating temperature range (atmosphere and media)	℃ [℉]	0～60 [32～140]						
Mounting direction		Any						
Mass	kg [lb.]	2.1 [4.6]		4.3 [9.5]			8.5 [18.7]	

Solenoid Specifications

Item \ Solenoid type		Double solenoid (E2)
Voltage type	V	See the Voltage Types and Current.
Voltage range	%	Rated voltage ±10%
Current	mA	See the Voltage Types and Current.
Energizing type		Continuously energizing type
Insulation type		B type (Insulation resistance over 10MΩ)
Wiring type		Terminal connection

Flow Rate

●253-4E2

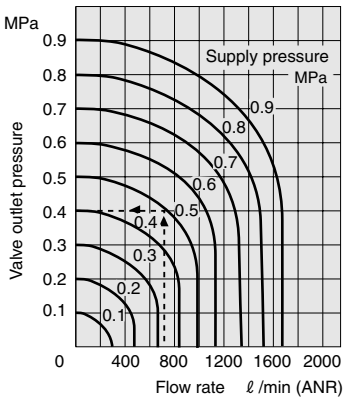

How to read the graph
When the supply pressure is 0.5MPa [73psi.] and the flow rate is 740 ℓ/min [26.1ft³/min.] (ANR), the valve outlet pressure becomes 0.4MPa [58psi.].

1MPa = 145psi., 1 ℓ/min = 0.0353ft³/min.

●503-4E2

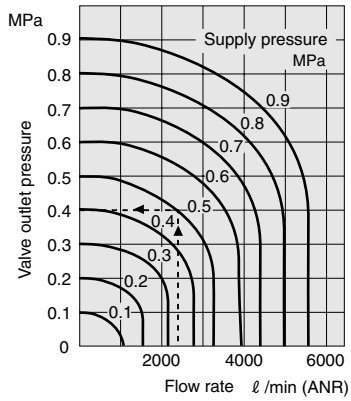

How to read the graph
When the supply pressure is 0.5MPa [73psi.] and the flow rate is 2500 ℓ/min [88.3ft³/min.] (ANR), the valve outlet pressure becomes 0.4MPa [58psi.].

1MPa = 145psi., 1 ℓ/min = 0.0353ft³/min.

●753-4E2

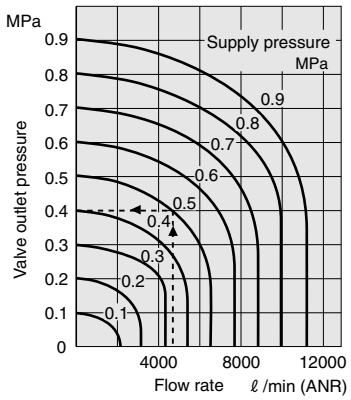

How to read the graph
When the supply pressure is 0.5MPa [73psi.] and the flow rate is 4900 ℓ/min [173ft³/min.] (ANR), the valve outlet pressure becomes 0.4MPa [58psi.].

1MPa = 145psi., 1 ℓ/min = 0.0353ft³/min.

Inner Construction

●503-4E2 type, 753-4E2 type

A pilot valve is not built into the 253-4E2 type.

Intermediate stopping condition
(Both solenoids S1, S2 are de-energized)

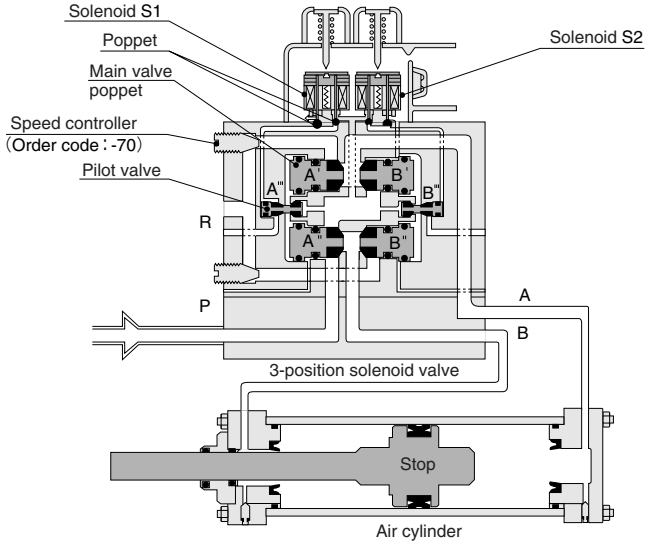

Cylinder operating condition
(Solenoid S1 energized)

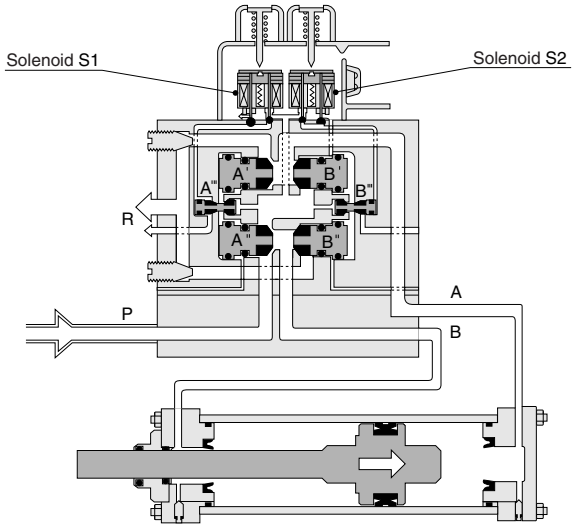

Operation principles

1. Energizing the solenoid S1 in the intermediate stop condition causes the poppet to fall, and the pilot valve A''', and the main valve poppets A' and A'' move to the left.
   As a result, the P port air flows to the B side, the cylinder piston moves to the right, and the head side air is exhausted from the R port.

2. When the solenoid S2 is energized, the B side pilot valve and main valve poppet move to the right, as in the 1. above, and the piston moves to the left.

3. Energizing both solenoids S1 and S2 simultaneously causes the 1. and 2. description at left to occur at the same time, with the air coming from the P port flowing to all of the B, A and R ports. In this case, be aware that the cylinder thrust is almost completely lost, and a large volume of air is exhausted from the R port.

Parts	Materials
Body	Aluminum alloy (anodized)
Stem	Brass
Main valve poppet	Synthetic rubber
Seal	

Application Example (3-position solenoid valve closed center)

Safety measures in an emergency

1. Pushing up wood material
Dangerous when using the 2-position solenoid valve, due to power outage or emergencies. For instance, a sudden fall will occur.

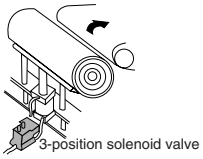

2. Robot arm operation
When using the 2-position solenoid valve, the arm retracts during a power outage, causing damage to the machinery and/or workpieces.

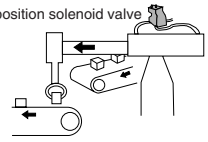

3. Container transfer
Example shows a container being filled with liquid and transferred to the next process. The 2-position solenoid valve can cause a sudden return to the original position during a power outage.

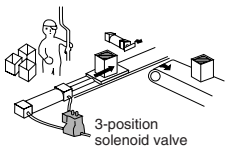

Change in cylinder stroke

1. Opening and closing door of heat treatment furnace
The workpiece can be retracted or pushed inward without opening the door wider than necessary.

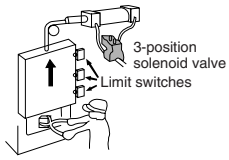

2. Height adjustment of sealing roller
Even with boxes of different heights, the roller position can be changed to perform sealing operations.
Note: When using for long periods at a set height, adjustment against drift is required.

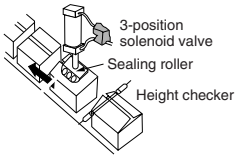

Inching

1. Engine mounting operation
Inch up the engine to raise it, and align it with the mounting bolt position.

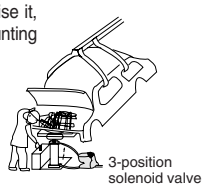

Order Codes

●253 series

253 — 4E2 — □ — □ — □ — □

Series | Double solenoid | Port size | Valve function | Option | Voltage

Port size

Code	Specifications
Blank	Rc1/4
03	Rc3/8

Valve function

Code	Specifications
Blank	Closed center
13	Exhaust center

Option

Code	Specifications
70	With speed controller
81	With locking type manual override

Voltage

Code	Specifications
AC100V	AC 100V 50/60Hz
AC200V	AC 200V 50/60Hz
DC24V	DC24V

See notes 1 and 2.
For other voltages, see p.882.

Example: **253-4E2**-AC100V
253-4E2-03-70-AC100V

●503 series

503 — 4E2 — □ — □ — □ — □

Series | Double solenoid | Port size | Valve function | Option | Voltage

Port size

Parts	Specifications
Blank	Rc1/2
03	Rc3/8
06	Rc3/4

Valve function

Code	Specifications
Blank	Closed center
13	Exhaust center

Option

Code	Specifications
70	With speed controller
81	With locking type manual override

Voltage

Parts	Specifications
AC100V	AC 100V 50/60Hz
AC200V	AC 200V 50/60Hz
DC24V	DC24V

See notes 1 and 2.
For other voltages, see p.882.

Example: **503-4E2**-AC100V
503-4E2-03-70-AC100V

●753 series (semi-standard)

753 — 4E2 — □ — □ — □

Series | Double solenoid | Port size | Option | Voltage

Port size

Code	Specifications
Blank	Rc3/4
08	Rc 1

Option

Code	Specifications
70	With speed controller
81	With locking type manual override

Voltage

Parts	Specifications
AC100V	AC 100V 50/60Hz
AC200V	AC 200V 50/60Hz
DC24V	DC24V

See notes 1 and 2.
For other voltages, see p.882.

Example: **753-4E2**-AC100V
753-4E2-03-70-AC100V

Notes: 1. Also specify Hz for AC110V and 220V.
2. For the order code, first enter numbers, in order from small to large, and then enter alphabetic characters.

Dimensions (mm)

●253-4E2 type

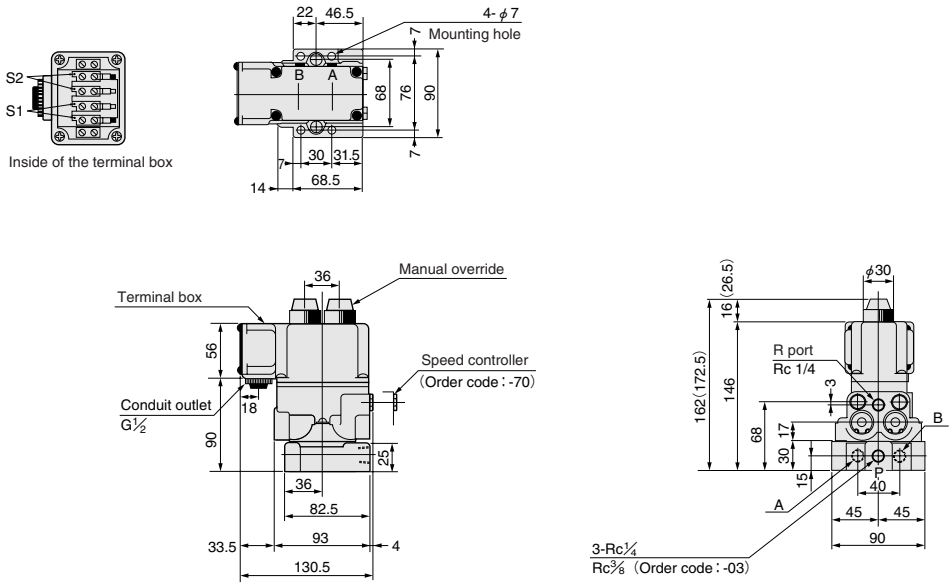

Note: Figures in parentheses ( ) are for the double solenoid with locking type manual override (**-81**).

●About manifold valves

Manifold valves that can be mounted on the same manifold base as the 254 series are available for the 253 series.

Dimensions (mm)

●503-4E2 type

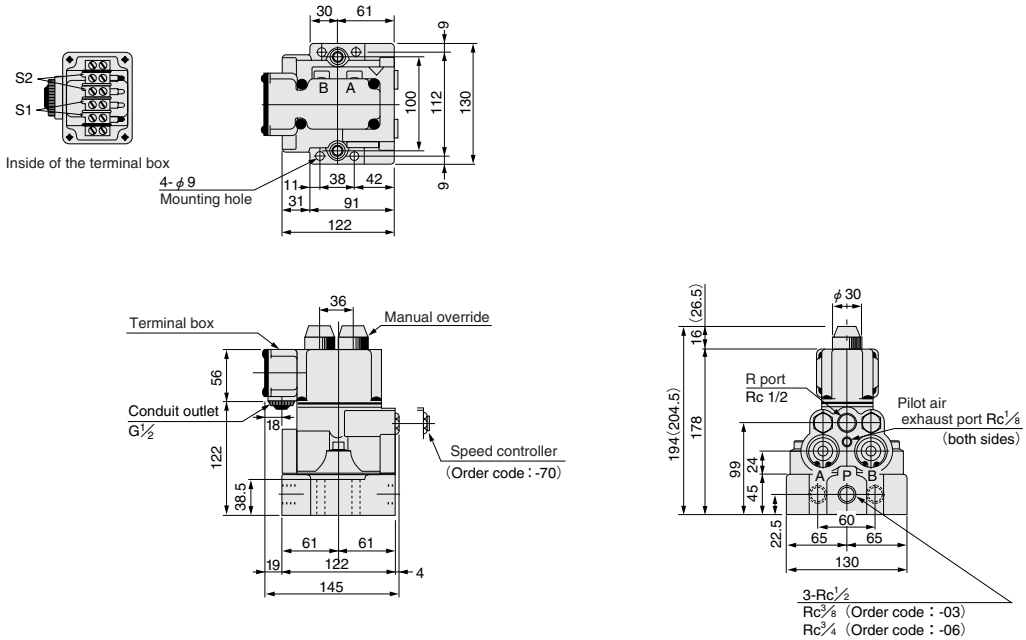

Note: Figures in parentheses ( ) are for the double solenoid with locking type manual override (**-81**).

●753-4E2 type

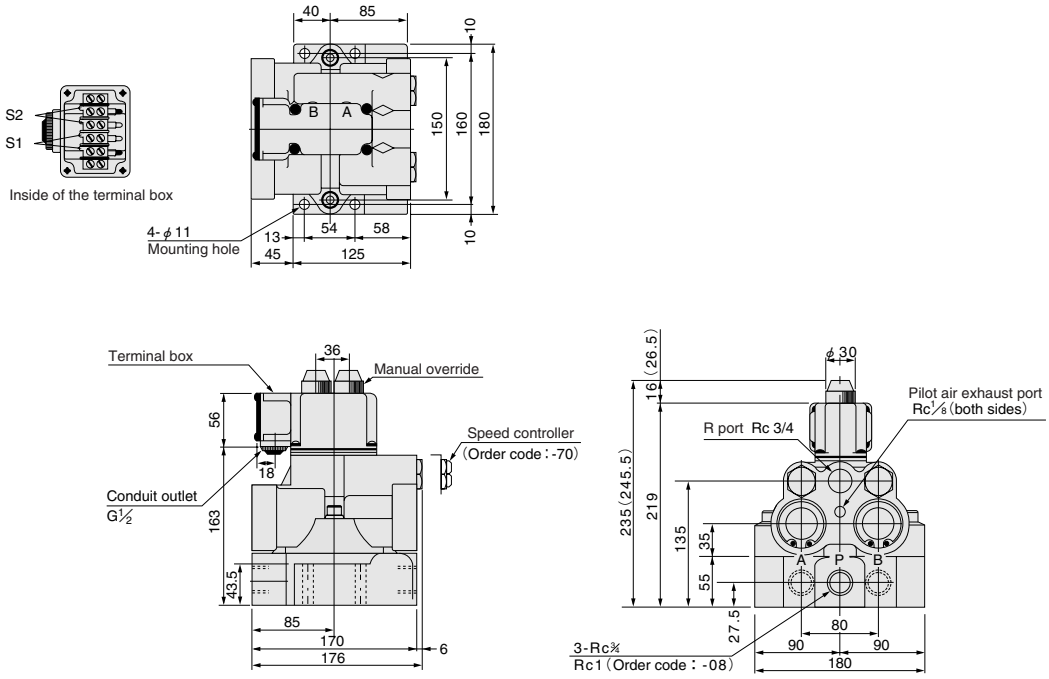

Note: Figures in parentheses ( ) are for the double solenoid with locking type manual override (**-81**).

Application Examples

●When placing bar-like objects into the box

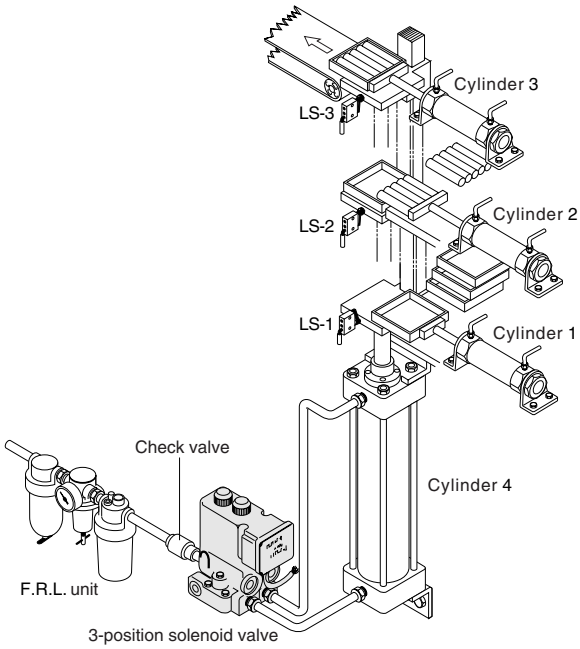

●Pneumatic circuit diagram

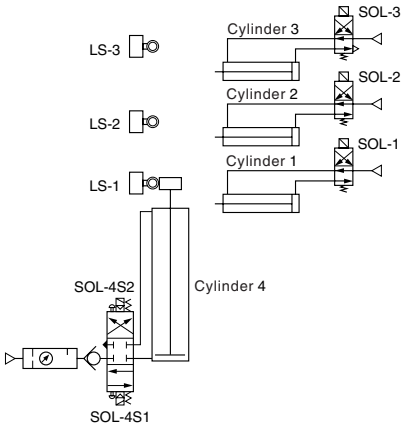

●Electric control circuit diagram

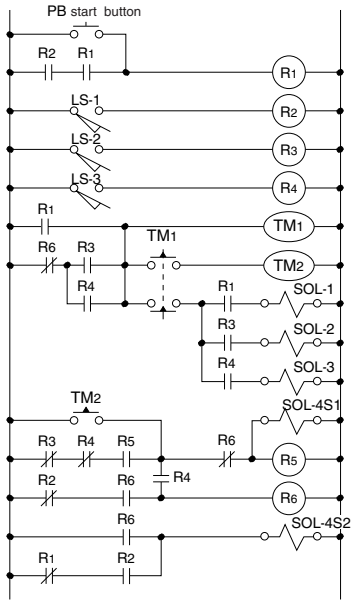

●Time chart

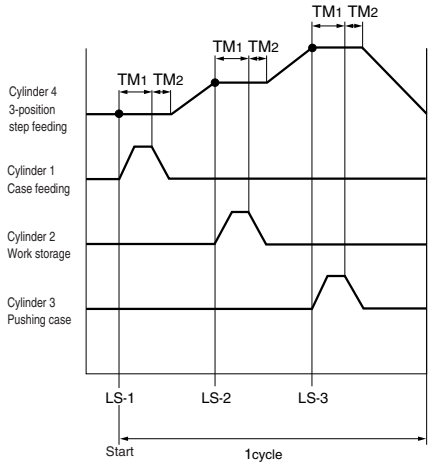

Note: In cases of large loads, the cylinder piston rod could move up and down and go out of the limit switch operating range. Countermeasures are needed.

Applicable Cylinder Bore Size for Each Valve

Valve model	Bore size ϕ mm [in.]
253-4E2	40 [1.575], 50 [1.969], 63 [2.480], 80 [3.150], 100 [3.937]
503-4E2	100 [3.937], 125 [4.921], 140 [5.512], 160 [6.299]
753-4E2	160 [6.299], 180 [7.087], 200 [7.874]

Stopping Positioning Accuracy for Cylinder Speed (Measurement Value)

Using Koganei DYNA and SD Cylinder, Operating Pressure 0.5MPa, Horizontal Load, Piping Length 500mm

mm [in.]

Valve model	Bore size mm [in.]	Load Load ratio to cylinder output	Cylinder speed mm/s [in./sec.]		
			100 [3.9]	200 [7.9]	300 [11.8]
253-4E2	ϕ 50 [1.969]	0	4±0.5 [0.157±0.020]	9±0.5 [0.354±0.020]	15±0.5 [0.591±0.020]
		50%	5±0.5 [0.197±0.020]	12±1 [0.472±0.039]	20±2 [0.787±0.079]
	ϕ 80 [3.150]	0	3±1 [0.118±0.039]	5±1 [0.197±0.039]	9±1 [0.354±0.039]
		50%	3±0.5 [0.118±0.020]	10±1 [0.394±0.039]	—
	ϕ 100 [3.937]	0	4±0.5 [0.157±0.020]	9±1 [0.354±0.039]	—
		50%	4.5±0.5 [0.177±0.020]	—	—
503-4E2	ϕ 80 [3.150]	0	3±0.3 [0.118±0.012]	6±0.5 [0.236±0.020]	10±1 [0.394±0.039]
		50%	4±0.8 [0.157±0.031]	8±1 [0.315±0.039]	13±1.5 [0.512±0.059]
	ϕ 100 [3.937]	0	4.5±0.5 [0.177±0.020]	9±0.5 [0.354±0.020]	15.5±0.5 [0.610±0.020]
		50%	4.5±0.3 [0.177±0.012]	9.5±0.5 [0.374±0.020]	15±1 [0.591±0.039]
753-4E2	ϕ 100 [3.937]	0	5±0.5 [0.197±0.020]	10±0.8 [0.394±0.031]	16±1 [0.630±0.039]
		50%	5.5±0.3 [0.217±0.012]	11.5±0.8 [0.453±0.031]	18.5±1 [0.728±0.039]
	ϕ 160 [6.299]	0	4.5±0.5 [0.177±0.020]	8±0.5 [0.315±0.020]	11±0.5 [0.433±0.020]
		50%	3±0.8 [0.118±0.031]	5±1 [0.197±0.039]	9±1.5 [0.354±0.059]

Note: Cylinder sliding resistance, etc., leads to quite large speed variations. In addition, vertical load can generate "vibration (damping vibration)" until stopped. Use this table as a guide.

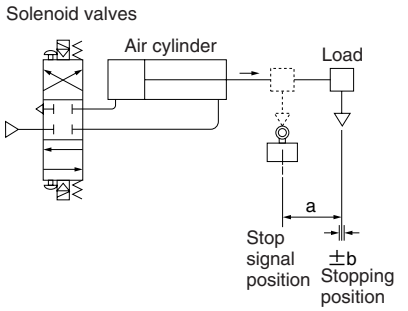

a : Overrun distance
b : Repeatability

How to read the table
For example, when the 253-4E2 type solenoid valve is used, and stops an operating ϕ 80 [3.150in.] cylinder with no load and the horizontal operating speed of 200mm/s [7.9in./sec.], then it overruns by about 5mm [0.197in.] beyond the limit switch that sent the stop signal when it actuates the switch, until stopping.
When the operation is repeated, then it stops within ±1mm [±0.039in.] of the range, or in other words, 4～6mm [0.158～0.236in.].

Handling Precautions

For improving stopping accuracy

- Keep the piping short, and ensure that the fittings, etc., do not leak.
- Use a bore size with plenty of margin for the required thrust. A suitable level is 2～4 times the thrust.
- Avoid selecting a valve that has too large a capacity for the cylinder bore size (see the table for appropriate cylinders).
- Do not use too fast of a cylinder speed.
- Use a speed controller valve built-in type (Order Code: -70). Mounting a speed controller between the cylinder and valve may result in a failure to stop, or in a bad response to a stop.
- Cannot be used in combination with the hydro checker.

For safety

- When a load has thrust force (vertical loads, etc.), it can momentarily move in the opposite direction when switching from forward to reverse. At this time, installation of a check valve just prior to the valve's P port can prevent this phenomenon.
- When left unused in an intermediate position for a long period, the air inside the cylinder could often leak out when operated again. In this case, it is impossible to control the speed, and high-speed cylinder operation is dangerous.
  Therefore, after completion of operations, or after having left the unit for long periods or when exhausted the pressure from the P side, use the following sequence to commence operations. Also take safety circuit measures into consideration:

1. Always position the piston rod either to the extended or to the retracted end after operation.
2. The next time the piston is moved, send a forward signal when the piston is stopped at the extended end, and send a backward signal when it is stopped at the retracted end.
3. Resume normal operations.

- For handling precautions common to the solenoid valves round type series, see p.884.

Explosion Proof Solenoid Valves
(Flameproof construction d2G4)

Direct acting 3-port,
internal pilot type 4-port

Symbols

3-port	4-port
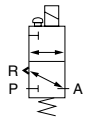	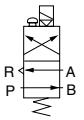
EP062E1-01 **EP062E1-02**	**EP254-4E1** **EP375-4E1** **EP501-4E1** **EP750-4E1**

Inner Construction

De-energized

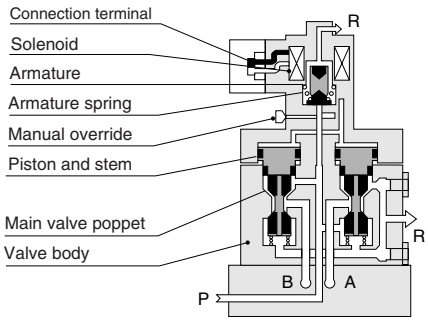

Energized

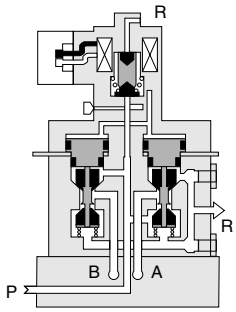

Basic Models and Valve Functions

Item \ Model	EP062E1-01	EP062E1-02	EP254-4E1	EP254-4E1-03	EP375-4E1	EP501-4E1	EP750-4E1
Number of positions	2						
Number of ports	3		4				
Valve function	Single solenoid						
	Normally closed (NC) or Normally open (NO)		————				

Specifications

Item \ Model		EP062E1-01	EP062E1-02	EP254-4E1	EP254-4E1-03	EP375-4E1	EP501-4E1	EP750-4E1
Media		Air						
Operation type		Direct acting type		Internal pilot type				
Effective area〔Cv〕	mm^2	1.8〔0.08〕		15〔0.76〕		50〔2.5〕		100〔5.0〕
Port size	Rc	1/8	1/4		3/8		1/2	3/4
Lubrication		Not required				Required (Turbine Oil Class 1 (ISO VG32) or equivalent)		
Operating pressure range	MPa {kgf/cm^2} [psi.]	0～0.7 {0～7.1} [0～102]		0.1～0.9 {1.0～9.2} [15～131]				
Proof pressure	MPa {kgf/cm^2} [psi.]	1.05 {10.7} [152]		1.35 {13.8} [196]				
Response time ON/OFF	ms ON	50		70				140
	ms OFF	50		70				140
Maximum operating frequency	Hz	5						
Minimum time to energize for self holding	ms	—						
Operating temperature range (atmosphere and media)	°C [°F]	0～60 [32～140]						
Mounting direction		Any						
Mass	kg [lb.]	0.9 [2.0]		1.5 [3.3]		1.8 [4.0]	1.7 [3.7]	4.1 [9.0]

Major Parts and Materials

Parts	Materials
Body	Aluminum alloy (anodized)
Stem	Brass
Main valve poppet	Synthetic rubber
Seal	

Solenoid Specifications

Item \ Solenoid type	Single solenoid (E1)
Voltage type V	See the Voltage Types and Current.
Voltage range %	Rated voltage ＋10%, －15%
Current mA	See the Voltage Types and Current.
Energizing type	Continuously energizing type
Insulation type	H type (Continuously energizing type, Explosion proof code d2G4. Labor authorization 21092)
Wiring type	PF1/2 explosion proof connector

Voltage Types and Current

●AC mA (r.m.s)

Voltage V	Single solenoid (**E1**) 50Hz Starting	50Hz Energizing	60Hz Starting	60Hz Energizing
220※1	150	180	130	80
200	140	80	130	70
110	300	190	250	150
100	270	160	250	130

●DC mA

Voltage V	Single Solenoid (**E1**)
110※2	80
100※2	70
24	330

Notes: 1. For items with ※1, specify the frequency and consult us for the delivery.
2. For ※2 items, consult us for the delivery.
3. The return current will vary depending on the rated voltage, but within a range of 2～20mA.

Order Codes

●EP062 series

EP 062 E1 — [ ] — [ ]

Explosion proof solenoid valve — Series — Single solenoid — Port size — Voltage

Port size

Code	Specifications
01	Rc 1/8
02	Rc 1/4

Voltage

Code	Specifications
AC 100V	AC 100V 50/60Hz
AC 200V	AC 200V 50/60Hz
AC 110V	AC 110V 50/60Hz
AC 220V	AC 220V 50/60Hz
DC 24V	DC 24V
DC 100V	DC 100V
DC 110V	DC 110V

Example: **EP062E1**-01-AC100V
EP062E1-02-AC100V

●EP254 series

EP 254 — 4E1 — [ ] — [ ] — [ ]

Explosion proof solenoid valve — Series — Single solenoid — Port size — Option — Voltage

Port size

Code	Specifications
Blank	Rc 1/4
03	Rc 3/8

Option

Code	Specification
70	With speed controller

Voltage

Code	Specifications
AC 100V	AC 100V 50/60Hz
AC 200V	AC 200V 50/60Hz
AC 110V	AC 110V 50/60Hz
AC 220V	AC 220V 50/60Hz
DC 24V	DC 24V
DC 100V	DC 100V
DC 110V	DC 110V

Example: **EP254-4E1**-AC100V
EP254-4E1-03-70-AC100V

●EP375 series (semi-standard)
●EP501 series (semi-standard)

EP [ ] **— 4E1** — [ ]

Explosion proof solenoid valve — Series — Single solenoid — Voltage

Series

Code	Specifications
375	Port size Rc3/8
501	Port size Rc1/2

Voltage

Code	Specifications
AC 100V	AC 100V 50/60Hz
AC 200V	AC 200V 50/60Hz
AC 110V	AC 110V 50/60Hz
AC 220V	AC 220V 50/60Hz
DC 24V	DC 24V
DC 100V	DC 100V
DC 110V	DC 110V

Example: **EP375-4E1**-AC100V
EP501-4E1-AC100V

●EP750series (semi-standard)

EP 750 — 4E1 — [ ]

Explosion proof solenoid valve — Series — Single solenoid — Voltage

Voltage

Code	Specifications
AC 100V	AC 100V 50/60Hz
AC 200V	AC 200V 50/60Hz
AC 110V	AC 110V 50/60Hz
AC 220V	AC 220V 50/60Hz
DC 24V	DC 24V
DC 100V	DC 100V
DC 110V	DC 110V

Example: **EP750-4E1**-AC100V

Flow Rate

●EP062 series

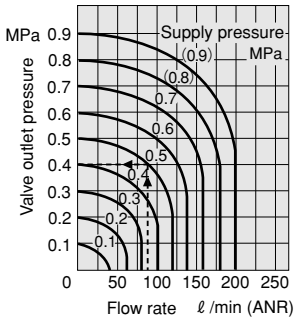

How to read the graph
When the supply pressure is 0.5MPa [73psi.] and the flow rate is 85 ℓ /min [3.0ft.³/min.] (ANR), the valve outlet pressure becomes 0.4MPa [58psi.].

●EP254 series

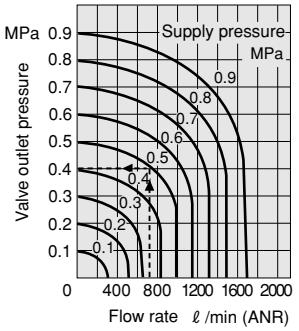

How to read the graph
When the supply pressure is 0.5MPa [73psi.] and the flow rate is 740 ℓ /min [26.1ft.³/min.] (ANR), the valve outlet pressure becomes 0.4MPa [58psi.].

●EP375, 501 series

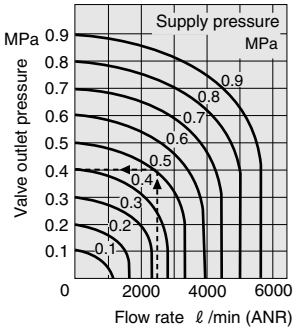

How to read the graph
When the supply pressure is 0.5MPa [73psi.] and the flow rate is 2500 ℓ /min [88.3ft.³/min.] (ANR), the valve outlet pressure becomes 0.4MPa [58psi.].

●EP750 series

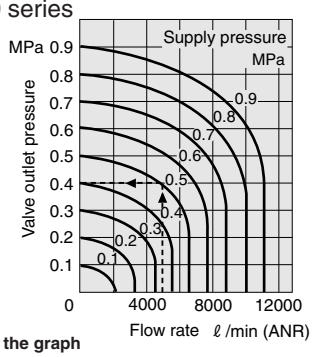

How to read the graph
When the supply pressure is 0.5MPa [73psi.] and the flow rate is 4900 ℓ /min [173ft.³/min.] (ANR), the valve outlet pressure becomes 0.4MPa [58psi.].

1MPa = 145psi., 1 ℓ /min = 0.0353ft.³/min.

Dimensions (mm)

●EP062E1-01　EP062E1-02

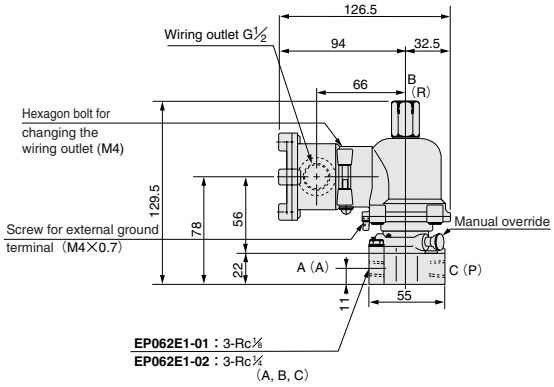

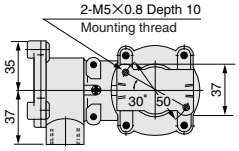

●EP254-4E1

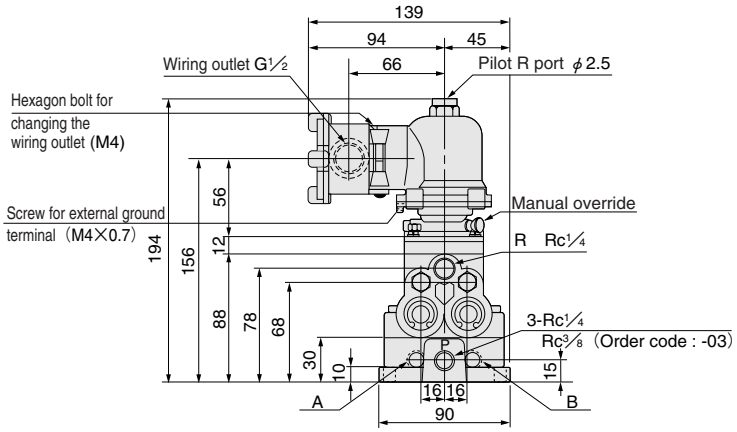

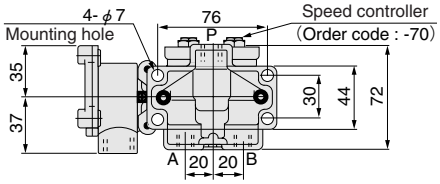

●EP375-4E1　EP501-4E1

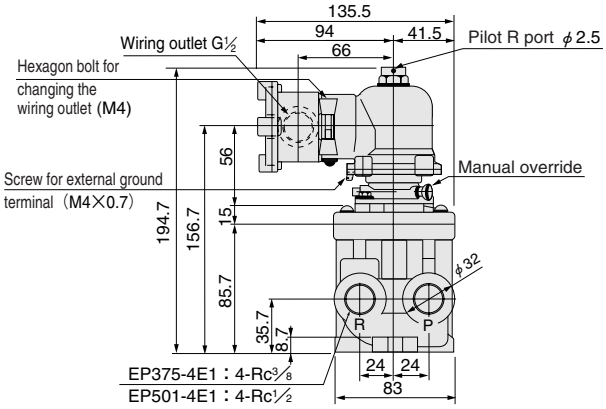

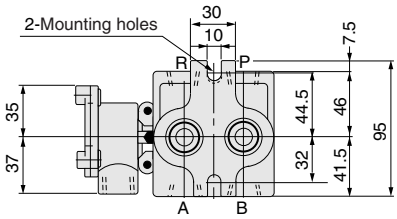

●EP750-4E1

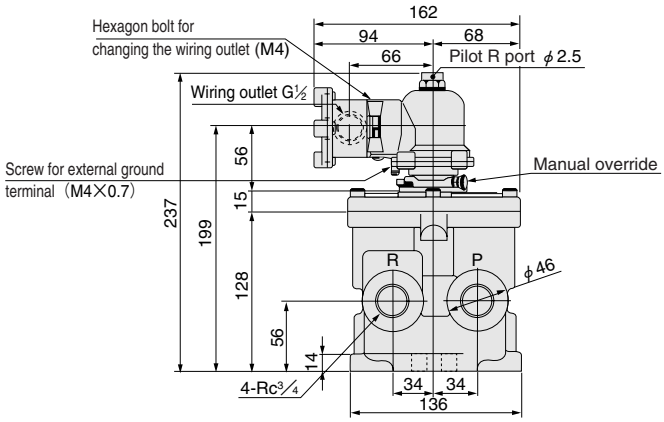

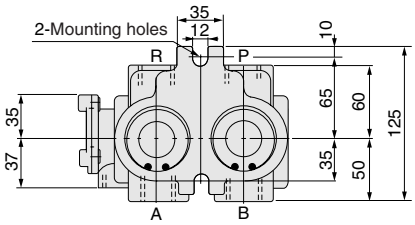

Explanation of Explosion Proof Code [d2G4] and the Usable Range

Explosion proof codes for the explosion proof solenoid valves are determined by the construction and the applications.
The Koganei explosion proof solenoid valve's explosion proof code is "d2G4." In other words, the construction is "d: Flameproof construction" that can be used in Type 1 and Type 2 dangerous locations, and that can withstand explosive gases that reach dangerous densities up to "2: Gas with explosion class up to 2," and "G4: Gas with ignition temperature up to G4" level.

d2G4

Applicability to Explosive Gases

: **Explosive gases with which product can be used**

Explosion class (Code)	Degree of ignition extension	G1 (Ignition temp. Over 450 [842])	G2 (Over 300 [572] 450 [842] or less)	G3 (Over 200 [392] 300 [572] or less)	G4 (Over 135 [275] 200 [392] or less)	G5 (Over 100 [212] 135 [275] or less)
1	Over 0.6mm [0.024in.] for values that provide clearance in cases in which ignition extension occurs at a depth of 25mm [0.984in.]. 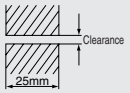	●Acetone ●Ammonia ●Carbon monoxide ●Ethane ●Acetic acid ●Ethyl acetate ●Toluene ●Propane ●Benzene ●Methanol ●Methane	●Ethanol ●Isoamyl acetate ●1-buthanol ●Butane ●Acetic anhydride	●Gasoline ●Hexane	●Acetaldehyde ●Ethyl ethel	
2	Over 0.4mm [0.016in.] 0.6mm [0.024in.] or less	●Coal gas	●Ethylene ●Ethylene oxide			
3	0.4mm [0.016in.] or less	●Water gas ●Hydrogen	●Acetylene			●Carbon disulfide

Types of Explosion Proof Construction, and Applicability to Hazardous Locations

Types of hazardous locations			Type 0 location	Type 1 location	Type 2 location
Explanation of hazardous locations			Locations that continuously generate dangerous ambient atmosphere, or threaten to do so, and where explosive gas concentrations are either continuously present or present for long periods, and exceed explosive limits.	Locations where dangerous ambient atmosphere threaten to be generated in normal conditions, and where the following conditions prevail: (1) Locations where explosive gases threaten to be accumulated in dangerous concentrations in normal conditions. (2) Locations where repairs, maintenance, or leaks often threaten to let explosive gases be accumulated in dangerous concentrations.	Locations where dangerous ambient atmosphere can be generated in abnormal conditions: (1) Locations where inflammable gases or inflamable liquid are handled on a normal basis, but are enclosed in sealed containers or facilities, and dangerous concentrations are threatened only when an accident or erroneous operation, or damage to the containers or facilities, causes the gases or liquids to leak. (2) Locations where mechanical ventilation devices serve to prevent the collection of explosive gases, so that ventilation system failure can threaten the collection and dangerous concentration of explosive gases. (3) Locations on the periphery of Type 1 locations, or in adjoining rooms, where penetrations of explosive gases in dangerous concentrations are rare occurrences. ■Cases likely to become Type 2 locations: (1) Cases in which containers storing hazardous materials are damaged due to corrosion degradation, etc., and threaten to leak. (2) Locations where misoperation of equipment can lead to emissions of hazardous materials or other abnormal reactions, resulting in high pressures and temperatures that break equipment and threaten to leak hazardous materials. (3) Cases in which breakdowns in forced ventilation systems cause explosive gases to stagnate and threaten to generate dangerous atmospheric conditions.
Hazardous locations and other likely locations			(1) Locations such as a container of inflammable liquid, or space above the liquid in a tank, in which the density of explosive gas is present continuously and exceeds the explosion limit. (2) Inside of an inflammable gas container or tank, etc. (3) Locations near surface of an inflammable liquid of an open container or equivalent.	(1) Locations near the openings of tank lorries, drums, or other containers storing inflammable liquids. (2) Locations near the opening of a relief valve which sometimes activates to release explosive gases. (3) Locations near the opening of tank gas bends. (4) Locations near opening of places where explosive gases are released during inspection and repair working. (5) Locations inside rooms or otherwise poorly ventilated places where explosive gases may be released. (6) Areas inside the roof shell of a floating roof tank. (7) Locations where explosive gases threaten to leak, and where gases can accumulate like pitch.	
Types of explosion proof construction					
Code	Construction				
e	Increased safety construction	Construction for areas where generation of sparks, arcs or over heating is never allowed during operations, and that prevents those occurrences, or construction that particularly increases safety when temperatures are rising.	×	×	○
f	Internal pressure explosion proof construction	Construction that supplies protective gases into the container, or that supplies fresh air or non-flammable gases to discharge any explosive gases before commencing operations that might have intruded the container, and that prevents those gases from intruding during operations.	×	○	○
d	Flameproof construction	Wholly sealed construction that can withstand the pressure even if explosions occur inside the container, and that will not allow ignition of explosive gases outside of the container.	×	○	○
i	Intrinsically safe construction	Construction that is certified by authorized institutions in ignition tests, etc., to prevent the threat of explosive gas ignition due to sparks, arcs, or heat generated by accidents (short circuits, earth fault, breaking wire, etc.) or during normal operations.	○	○	○

Operation of Manual Override

Removing the lock pin on the manual override and pulling out the manual override button causes the valve to switch.
Pulling it all the way out maintains the switched position, while pushing it in restores it to the normal position.
When not using it, always secure it in place with a pin.

Handling Precautions

- Use only within the usage range detailed in "Explosion proof construction type d2G4."
- Always firmly tighten all lock tightening portions.
- Do not apply tension force to the lead wire connecting portion and firmly secure the lead wires in appropriate locations.
- Use lead wires suited to the lead wire outlet.
- When releasing the lock tightening portion, shut off the power to ensure a non-voltage condition.
- When activating the solenoid, always leave the manual override lock pin in the inserted position.
- See the Safety Precautions on p.884.