KOGANEI

Air Cylinder

MINI GUIDE SLIDER

INSTRUCTION MANUAL Ver.1.0

Handling Instructions and Precautions

General precautions

Allowable kinetic energy

To carry the inertial load, operate the Mini Guide Slider with the kinetic energy below the allowable value. For details about the relation between the load and table speed, see "Allowable load mass" on p.600.

Piping

In piping connection with the Mini Guide Sliders, flush the tube completely (by blowing compressed air) before piping.
Intrusion of machining chips, sealing tape, rust, etc., generated during plumbing could result in air leaks and other defective operations.

Media

1. Use air for the media. For the use of any other media, consult us.
2. Air used for the Mini Guide Sliders should be clean air that contains no deteriorated compressor oil, etc. Install an air filter (filtration of a minimum 40 μm) near the Mini Guide Slider or valve to remove collected liquid or dust. In addition, drain the air filter periodically. Collected liquid or dust entering the Mini Guide Slider may cause improper operation.

Lubrication

1. Do not lubricate the clean system cylinders (cleanroom specification). Lubrication causes malfunctions.
2. The standard cylinder can be used without lubrication, if lubrication is required, use Turbine Oil Class 1 (ISO VG32) or equivalent. Avoid using spindle oil or machine oil.
3. Apply CGL grease (Nippon Thompson Co., Ltd. made) on the raceway surface of the track rail in the guide portion every 6 months or 3 million operations.

Atmosphere

1. When using in locations subject to dripping water, dripping oil, etc., or to large amounts of dust, use a cover to protect the unit.
2. Do not use the Mini Guide Sliders in a corrosive atmosphere. Use in such surroundings causes damage or malfunctions.
3. The main body and table are made of stainless steel. However, they may rust depending on the operating environment. Apply no-rust oil to them periodically.
4. Do not use the products under extremely dry conditions.
5. The ambient temperature range most suitable for use of the Mini Guide Slider is from 5° to 60°C [41～140°F]. Use at temperatures exceeding 60°C [140°F] causes damage or malfunctions. When the temperature is 5°C [41°F] or below, moisture in the air is frozen to cause damage and malfunctions. Take some anti-freezing measures.

During Operation

1. Do not place hands in the operating direction of the Mini Guide Sliders.
2. At initial operation, pay sufficient attention to the operating direction of the slider.
3. Care should be taken not to be trapped your body or fingers between the slider and the plate when the slider table is retracting.
4. For maintenance, check that there is no residual pressure in the slider.
5. The slider speed should be 500mm/s [20in./sec.] or less (300 mm/s [12in./sec.] or less for the clean system cylinders (cleanroom specification)). Even within the allowable range, if the speed and load are large, install external stoppers to avoid applying direct shocks to the slider.

Mounting, stroke adjusting, and piping

Mounting

1. While any mounting direction is allowed (excluding with-buffer type), the flatness of the mounting surface of the workpiece or base should be 0.02mm [0.0008in.] or less. Improper flatness causes looseness in the guide portion, increases the rolling resistance, and adversely affects the product operating life.
2. Care should be taken that scratches or dents on the slider's mounting surface may damage its flatness.
3. In applications subject to large shocks, reinforce the bolt mounting by installing a support to the cylinder body, etc.
4. The table is supported with steel balls. Do not apply any strong shock or excessively large moment to the table when mounting the workpiece. Hold the table when securing the workpiece to the table. Tightening bolts with holding the cylinder gives excessively large moment to the guide, leading to deterioration of accuracy.
5. Ensure adequate strength of the mounting bolts for the cylinder and the end plate. When mounting the cylinder, tighten the bolts with torque within the allowable range.
6. Take measures against looseness of the bolts when shocks or vibrations might loosen the bolts.
7. Do not leave scratches or dents in the areas where the piston rod and the guide rod contact. It could result in damage to the seal or in air leaks.
8. Use clearance fit locating pins (optional stepped pins) for locating dowel pin holes. When a press-fit pin is used, excessive loads generated while pressing will cause a failure in the guide. Furthermore, the pin holes of the table are through holes, using pins other than the stepped pins will bump against the main body, causing a failure.

Caution: When mounting the Mini Guide Slider, avoid interference between the piping/fittings and the mounting surface because of its thinner construction.

●Mounting workpieces

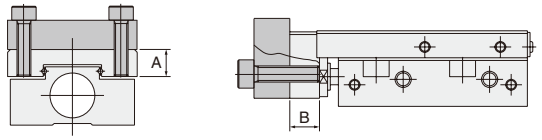

Model	Mounting bolt	Max. tightening torque N・m [in・lbf]	Max. threaded depth A mm [in.]	Max. threaded depth B mm [in.]
MGA□4.5	M3×0.5	0.63 [5.58]	4 [0.157]	4.5 [0.177]
MGA□6	M3×0.5	0.63 [5.58]	4 [0.157]	5.5 [0.217]
MGA□8	M3×0.5	0.63 [5.58]	5 [0.197]	5.5 [0.217]
MGA□10	M3×0.5	0.63 [5.58]	5 [0.197]	7 [0.276]
MGA□12	M4×0.7	1.5 [13.3]	7 [0.276]	7 [0.276]
MGA□16	M4×0.7	1.5 [13.3]	8.5 [0.335]	8 [0.315]
MGA□20	M5×0.8	3 [26.6]	10 [0.394]	9 [0.354]

Caution: The length of the workpiece mounting bolts should be below the maximum threaded depth. Long bolts will bump against the cylinder body, causing damage to the cylinder.

●Mounting cylinders (side-mounted specification)

Caution: Do not use washers, etc. The mounting bolt could touch the guide and damage it.

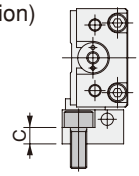

Model	Mounting bolt	Max. tightening torque N・m [in・lbf]	C mm [in.]
MGAL□4.5	M3×0.5	1.14 [10.09]	5 [0.197]
MGAL□6	M3×0.5	1.14 [10.09]	5 [0.197]
MGAL□8	M4×0.7	2.7 [23.9]	4 [0.157]
MGAL□10	M4×0.7	2.7 [23.9]	4 [0.157]

● Mounting cylinders

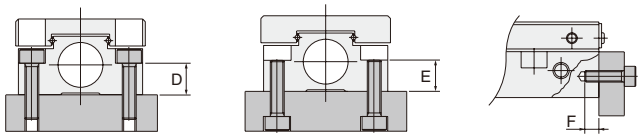

Model	Mounting bolt	Max. tightening torque N・m [in・lbf]	D mm [in.]
MGA□4.5	M2×0.4	0.32 [2.83]	3.5 [0.138]
MGA□6	M2.5×0.45	0.65 [5.75]	5 [0.197]
MGA□8	M2.5×0.45	0.65 [5.75]	5.5 [0.217]
MGA□10	M3×0.5	1.14 [10.09]	7 [0.276]
MGA□12	M4×0.7	2.7 [23.9]	6 [0.236]
MGA□16	M4×0.7	2.7 [23.9]	9 [0.354]
MGA□20	M5×0.8	5.4 [47.8]	12 [0.472]

Model	Mounting bolt	Max. tightening torque N・m [in・lbf]	E mm [in.]
MGA□4.5	M2.5×0.45	0.65 [5.75]	3.5 [0.138]
MGA□6	M3×0.5	1.14 [10.09]	5 [0.197]
MGA□8	M3×0.5	1.14 [10.09]	5.5 [0.217]
MGA□10	M4×0.7	2.7 [23.9]	7 [0.276]
MGA□12	M5×0.8	5.4 [47.8]	6 [0.236]
MGA□16	M5×0.8	5.4 [47.8]	9 [0.354]
MGA□20	M6×1	9.2 [81.4]	12 [0.472]

Model	Mounting bolt	Max. tightening torque N・m [in・lbf]	Max. threaded depth F mm [in.]
MGA□4.5	M2×0.4	0.32 [2.83]	2.5 [0.098]
MGA□6	M2.5×0.45	0.65 [5.75]	2.5 [0.098]
MGA□8	M3×0.5	1.14 [10.09]	3 [0.118]
MGA□10	M3×0.5	1.14 [10.09]	3 [0.118]
MGA□12	M4×0.7	2.7 [23.9]	4 [0.157]
MGA□16	M5×0.8	5.4 [47.8]	4 [0.157]
MGA□20	M5×0.8	5.4 [47.8]	5 [0.197]

Minimum mounting pitch for side-mounted specification

When using a short pitch mounting for the Mini Guide Slider's side-mounted specification, use the mounting pitches shown in the table below, or larger.

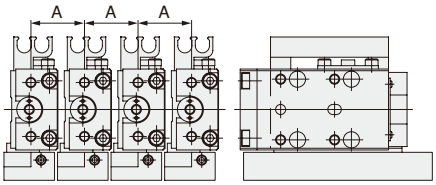

Minimum mounting pitch

Model	A mm [in.]
MGAL□4.5	12 [0.472]
MGAL□6	14 [0.551]
MGAL□8	16 [0.630]
MGAL□10	18 [0.709]

※ Assumes that the mounting surface is flat.

Stroke adjusting

If the stroke adjusting mechanism is selected as an option for bore sizes ϕ12 [0.472] to ϕ20 [0.787], stroke adjusting can easily be performed in the range shown on p.603. For stroke adjusting on either the extended or retracted side, rotating the stopper bolt or shock absorber to the right (clockwise) shortens the stroke. After adjustment, tighten the lock nut to secure in place. When mounting the shock absorber, do not exceed the maximum tightening torque shown below for the hexagon nut. Tightening in excess of the force could cause damage.

N・m [in・lbf]

Model	Max. tightening torque
KSHA4×4, CS-KSHC4×4	0.85 [7.52]
KSHA5×5, CS-KSHC5×5	2.5 [22.1]
KSHA6×8, CS-KSHC6×8	6.5 [57.5]

Recommended fittings

For piping used with the Mini Guide Sliders, the quick fitting and speed controller with quick fitting shown below are recommended.

- ϕ4.5 [0.177] to ϕ10 [0.394]
  TS2-M3M (Straight), TSH2-M2M (Hexagon socket head, straight), TL2-M3M (Elbow)
  Note: For details of fittings, see the separate catalog No.BKUA001.
- ϕ12 [0.472] to ϕ20 [0.787]
  SS4-M5MA (Straight)
  Note: For details of the speed controller with quick fitting, see the General Catalog of Air Treatment, Auxiliary, Vacuum.

Mounting the sensor rail and magnet

The Mini Guide Slider has sensor rails and tapped holes for magnet mounting on both sides so that the sensor rail position can be changed or attached at a later time. When mounting the bolts, tighten them at a suitable tightening torque within the allowable torque range. Always attach the plug for the piping connection port at the sensor rail side. When changing the plug position, apply sealant to the plug threads before screwing in. Install the plug at an intermediate position between the head protruding from the mounting sarface and bumping against the bottom.

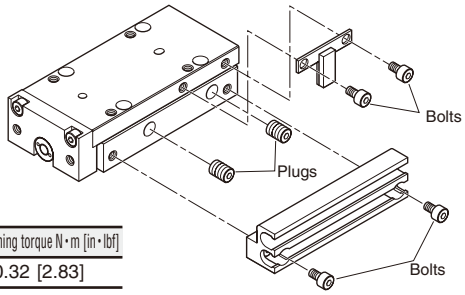

Mounting bolt	Max. tightening torque N・m [in・lbf]
M2×0.4	0.32 [2.83]

Accuracy

mm [in.]

Model		MGA□4.5~□16	MGA□20
Parallelism	Surface C against surface A	0.03 [0.0012]	
	Surface D against surface B	0.03 [0.0012]	
Traveling parallelism	Surface C against surface A	0.005 [0.00020]	0.006 [0.00024]
	Surface D against surface B	0.005 [0.00020]	0.006 [0.00024]
Dimensional tolerance of E		±0.05 [±0.0020]	
Dimensional tolerance of F		±0.05 [±0.0020]	
Dimensional tolerance of G		±0.05 [±0.0020]	

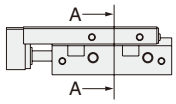

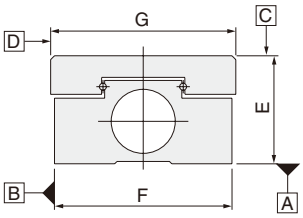

Section AA

Allowable load mass

1. Standard cylinders ϕ4.5 [0.177]~ϕ10 [0.394] (without stroke adjusting)

Model	MGA□4.5	MGA□6	MGA□8	MGA□10
Allowable kinetic energy J [ft・lbf]	1.59×10^{-3} [1.17×10^{-3}]	2.83×10^{-3} [2.09×10^{-3}]	5.02×10^{-3} [3.70×10^{-3}]	7.85×10^{-3} [5.79×10^{-3}]

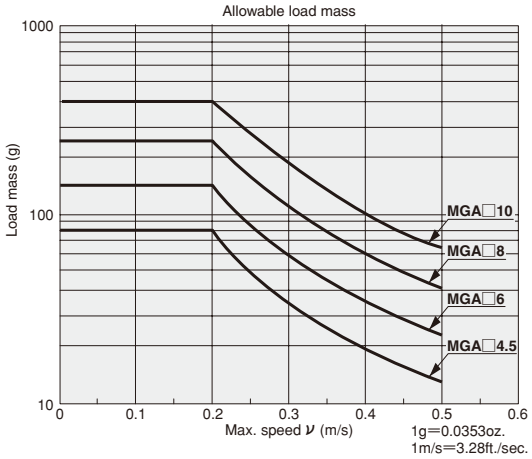

2. Standard cylinders ϕ12 [0.472]~ϕ20 [0.787] (without stroke adjusting)

Model	MGA□12	MGA□16	MGA□20
Allowable kinetic energy J [ft・lbf]	0.036 [0.027]	0.063 [0.046]	0.090 [0.066]

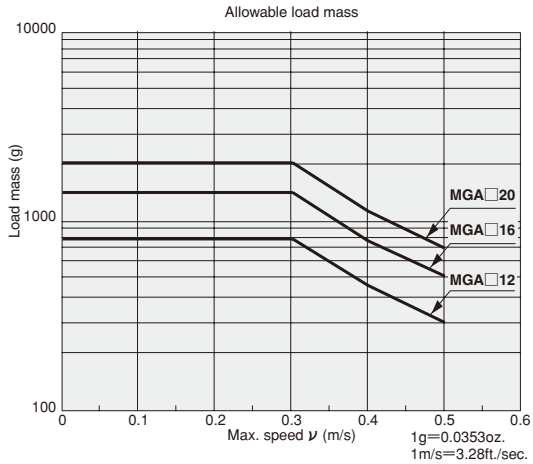

3. Cylinders with shock absorber ϕ12 [0.472]~ϕ20 [0.787]

Model	MGA□12	MGA□16	MGA□20
Allowable kinetic energy J [ft・lbf]	0.067 [0.049]	0.135 [0.100]	0.225 [0.166]

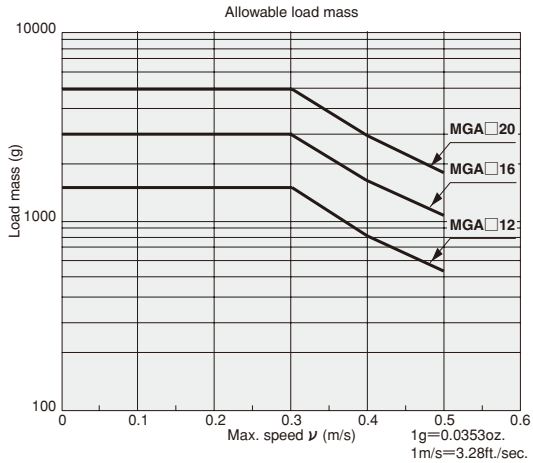

4. Cylinders with rubber stopper ϕ12[0.472]～ϕ20[0.787]

Model	MGA□12	MGA□16	MGA□20
Allowable kinetic energy J [ft・lbf]	0.025 [0.018]	0.044 [0.032]	0.063 [0.046]

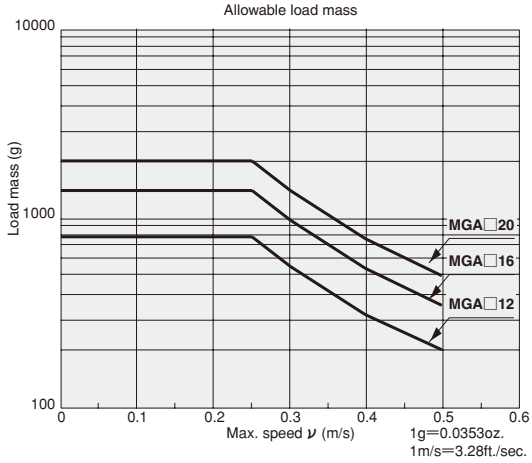

5. Cylinders with metal stopper ϕ12 [0.472]～ϕ20 [0.787]

Model	MGA□12	MGA□16	MGA□20
Allowable kinetic energy J [ft・lbf]	0.012 [0.009]	0.020 [0.015]	0.030 [0.022]

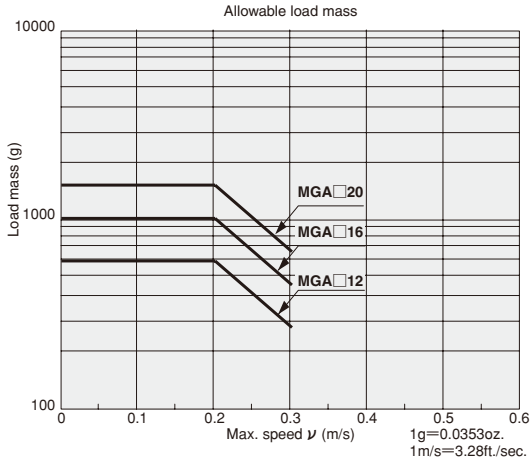

Allowable moment

The Mini Guide Sliders can be used with directly applying load. In this case, however, the load and moment should not exceed the values in the table to the right. If load is applied at the offset point from the guide portion in the stroke movement, the thrust force of the slider causes large moment.

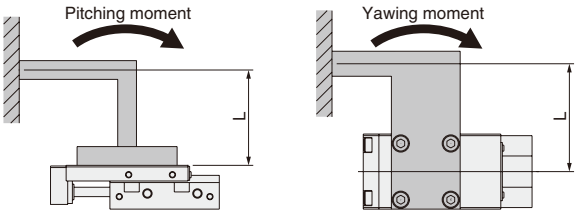

●Direction of moment and location of the guide center X

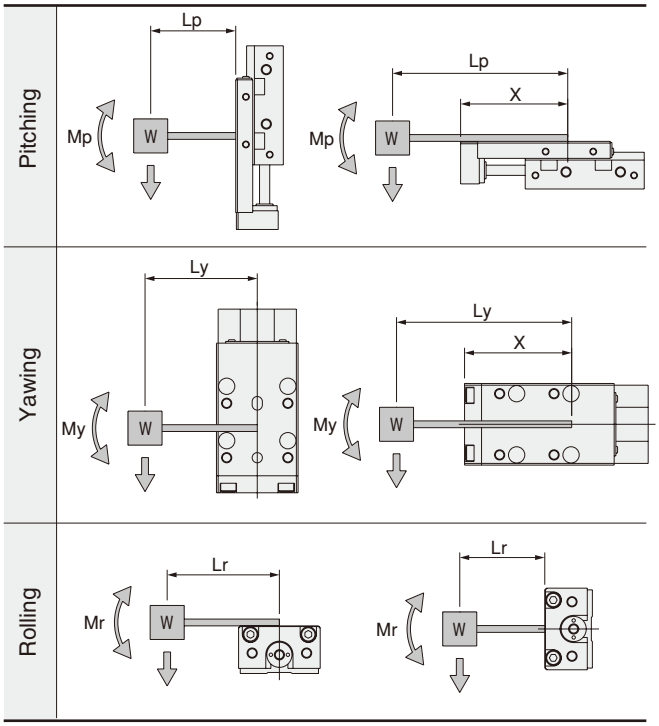

Note: The center of moment should be measured from the guide center in the diagrams.

●Location of the guide center mm [in.]

Model	Stroke	X Standard	X Buffer	X Clean
MGA□4.5	5	30 [1.181]	40 [1.575]	35 [1.378]
	10			
MGA□6	5	31.5 [1.240]	41.5 [1.634]	36.5 [1.437]
	10			
	15	36.5 [1.437]	46.5 [1.831]	41.5 [1.634]
MGA□8	5	31.5 [1.240]	41.5 [1.634]	36.5 [1.437]
	10			
	15	41.5 [1.634]	51.5 [2.028]	46.5 [1.831]
	20			
MGA□10	5	34 [1.339]	44 [1.732]	39 [1.535]
	10			
	15	44 [1.732]	54 [2.126]	49 [1.929]
	20			
	30	54 [2.126]	64 [2.520]	59 [2.323]

mm [in.]

Model	Stroke	X Standard	X Buffer	X Clean
MGA□12	10	49 [1.929]	64 [2.520]	57 [2.244]
	20			
	30	69 [2.717]	84 [3.307]	77 [3.031]
	40			
	50	89 [3.504]	104 [4.094]	97 [3.819]
	60			
MGA□16	10	51 [2.008]	65 [2.559]	59 [2.323]
	20			
	30	71 [2.795]	85 [3.346]	79 [3.110]
	40			
	50	91 [3.583]	105 [4.134]	99 [3.898]
	60			
MGA□20	10	55 [2.165]	68 [2.677]	63 [2.480]
	20			
	30	75 [2.953]	88 [3.465]	83 [3.268]
	40			
	50	95 [3.740]	108 [4.252]	103 [4.055]
	60			
	70	115 [4.528]	128 [5.039]	123 [4.843]
	80			

●Allowable moment N・m [in・lbf]

Model	Mp	My	Mr
MGA□4.5	0.24 [2.12]	0.29 [2.57]	0.22 [1.95]
MGA□6	0.28 [2.48]	0.34 [3.01]	0.23 [2.04]
MGA□8	0.28 [2.48]	0.34 [3.01]	0.38 [3.36]
MGA□10	0.28 [2.48]	0.34 [3.01]	0.38 [3.36]
MGA□12	1.5 [13.3]	1.7 [15.0]	2.6 [23.0]
MGA□16	2.1 [18.6]	2.5 [22.1]	4.3 [38.1]
MGA□20	2.5 [22.1]	3.0 [26.6]	4.8 [42.5]

Remark: The allowable moment includes the safety factor of 10 with respect to the calculated value of the guide. However, the calculated values are not guaranteed values.

Displacement angle of the table by bending moment

(Reference value)

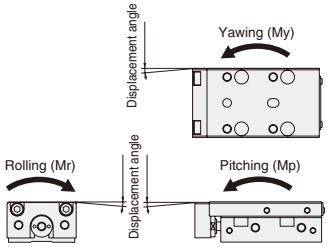

● ϕ 4.5 [0.177]～ ϕ 10 [0.394]

Pitching (Mp)

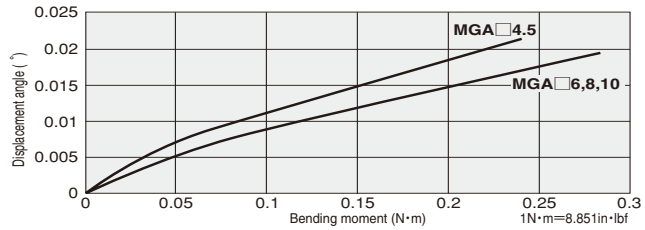

Yawing (My)

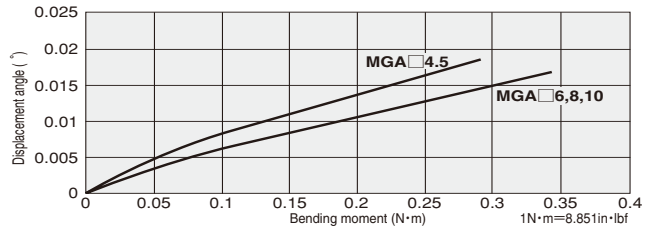

Rolling (Mr)

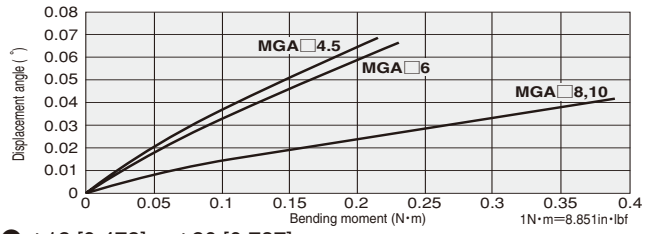

● ϕ 12 [0.472]～ ϕ 20 [0.787]

Pitching (Mp)

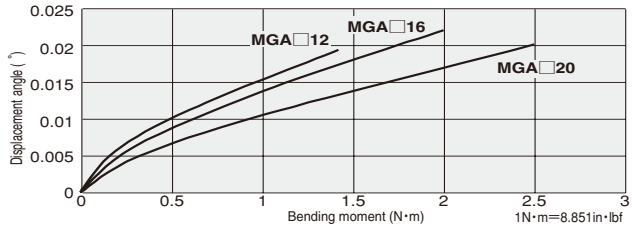

Yawing (My)

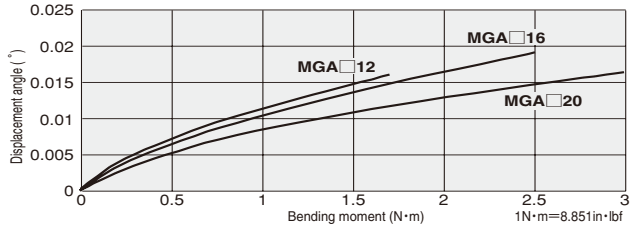

Rolling (Mr)

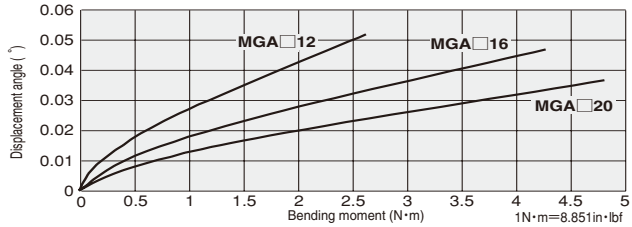

Control circuit for the end keep cylinder

1. For control of the Mini Guide Slider with end keep, we recommend the use of 2-position, 4-, 5-port valves. Avoid the use of control circuit with ABR connection (exhaust center) 3-position valves that exhaust air from delivery 2 ports.
2. Always use meter-out control for speed control. Meter-in control may result in failure of the locking mechanism to release.
3. Always set the operating air pressure to 0.2MPa [29psi.] or higher.

Cautions:
1. It is dangerous to supply air to a connection port on a side with a locking mechanism while the cylinder has already been exhausted, because the piston rod may suddenly extend, etc. In addition, since the lock piston could also cause galling of the lock piston and piston rod, resulting in defective operation. Always supply air to the connection port on the opposite side of the locking mechanism to ensure applying back pressure.
2. When restarting operations after air has been exhausted from the cylinder due to completion of operations or to an emergency stop, always start by supplying air to a connection port on the opposite side of the locking mechanism.
3. Connect the valve port A (NC) to the connection port on the side with the locking mechanism.

Manual operation of end keep cylinder locking mechanism

While the locking mechanism is normally released automatically through cylinder operations, it can also be released manually. For manual release, insert an M3×0.5 screw that has 30mm [1.18in.] screw length into the manual override opening, thread it in about 3 turns into the internal lock piston, and then pull up the screw. To maintain the manual override for adjustment, etc., thread the locknut onto the screw and, with the locking mechanism in a released state, tighten the locknut against the cylinder.

Cautions:
1. It is dangerous to release the lock when load (weight) is present on the piston rod, because it may cause the unintended piston rod's extension, etc. In this case, always supply air to the connection port opposite the one adjacent to the locking mechanism before releasing the locking mechanism.
2. If the locking mechanism cannot easily be released even with manual override, it could be the result of galling of the lock piston and piston rod. In this case, supply air to the connection port opposite the one adjacent to the locking mechanism before releasing the locking mechanism.
3. Water, oil, dust, etc., intruding through the manual override opening may be a cause of defective locks or other erratic operation. If using in locations subject to dripping water, dripping oil, etc., or large amounts of dust, use a cover to protect the unit.

Cylinder with buffer

Operating conditions

1. When using a cylinder with buffer, use in the direction the buffer mechanism facing either vertically downward or horizontally. Note that the load or speed may sometimes cause the buffer to operate at the end of the stroke. In this case, adjust the load and/or speed.
2. Do not operate the buffer mechanism on the retracted side.

MINI GUIDE SLIDERS

Standard, Stroke Adjusting, With Buffer, Side-Mounted, With End Keep Cylinders

Symbols

●Standard and Side-Mounted Cylinders

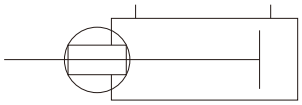

●Stroke Adjusting Cylinder

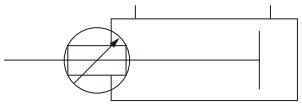

●Cylinder with End Keep

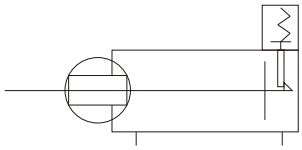

Specifications

●Standard and Side-Mounted Cylinders

Item \ Model		Standard	Side-mounted	Standard	Side-mounted	Standard	Side-mounted	Standard	Side-mounted	Standard		
		MGA□4.5	**MGAL□4.5**	**MGA□6**	**MGAL□6**	**MGA□8**	**MGAL□8**	**MGA□10**	**MGAL□10**	**MGA□12**	**MGA□16**	**MGA□20**
Bore size mm [in.]		4.5 [0.177]		6 [0.236]		8 [0.315]		10 [0.394]		12 [0.472]	16 [0.630]	20 [0.787]
Operation type		Double acting type										
Media		Air										
Operating pressure range MPa [psi.]		0.2～0.7 [29～102]				0.15～0.7 [22～102]				0.1～0.7 [15～102]		
Proof pressure MPa [psi.]		1.05 [152]										
Operating temperature range ℃ [°F]		0～60 [32～140]										
Operating speed range mm/s [in./sec.]		30～500 [1.2～20]								20～500 [0.8～20](Metal stopper(optional) : 20～300 [0.8～12])		
Cushion	Extended side	None		Rubber bumper						Rubber bumper		
	Retracted side									Shock absorber(optional)		
Port size		M3×0.5								M5×0.8		
Lubrication	Cylinder portion	Not required (If lubrication is required, use Turbine Oil Class 1 [ISO VG32] or equivalent.)										
	Guide portion	Required (CGL grease Nippon Thompson Co., Ltd. made) Note 1										
Perpendicularity of end plate mm [in.]		0.1 [0.004]										
Stroke tolerance mm [in.]		$^{+1}_{0}$ [$^{+0.039}_{0}$]										
Repeatability Note2 mm [in.]		—								±0.02 [±0.0008](Metal stopper, shock absorber)		
Stroke adjusting range Note2 mm [in.]	Metal stopper extended side	—								−8～0 [−0.315～0]	−7～0 [−0.276～0]	−7～0 [−0.276～0]
	Metal stopper retracted side	—								−10～0 [−0.394～0]	−8～0 [−0.315～0]	−10～0 [−0.394～0]
	Rubber stopper extended side	—								−9～0 [−0.354～0]	−8～0 [−0.315～0]	−8～0 [−0.315～0]
	Rubber stopper retracted side	—								−11～0 [−0.433～0]	−9～0 [−0.354～0]	−11～0 [−0.433～0]
	Shock absorber extended side	—								−9～0 [−0.354～0]	−7～0 [−0.276～0]	−12～0 [−0.472～0]
	Shock absorber retracted side	—								−11～0 [−0.433～0]	−8～0 [−0.315～0]	−15～0 [−0.591～0]
Allowable moment N・m [in・lbf]	Mp	0.24 [2.12]		0.28 [2.48]		0.28 [2.48]		0.28 [2.48]		1.5 [13.3]	2.1 [18.6]	2.5 [22.1]
	My	0.29 [2.57]		0.34 [3.01]		0.34 [3.01]		0.34 [3.01]		1.7 [15.0]	2.5 [22.1]	3.0 [26.6]
	Mr	0.22 [1.95]		0.23 [2.04]		0.38 [3.36]		0.38 [3.36]		2.6 [23.0]	4.3 [38.1]	4.8 [42.5]
Number of available sensor switches (optional)		1		2								

Notes: 1. Apply grease on the raceway surface of the track rail in the guide portion every 6 months or 3 million operations.
2. For units with stroke adjusting mechanism.

●Stroke Adjusting Cylinders

Item \ Model		Extended side stroke	Extended/retracted-side stroke	Extended side stroke	Extended/retracted-side stroke	Extended side stroke	Extended/retracted-side stroke	Extended side stroke	Extended/retracted-side stroke
		MGAP□4.5	**MGAE□4.5**	**MGAP□6**	**MGAE□6**	**MGAP□8**	**MGAE□8**	**MGAP□10**	**MGAE□10**
Bore size mm [in.]		4.5 [0.177]		6 [0.236]		8 [0.315]		10 [0.394]	
Operation type		Double acting type							
Media		Air							
Operating pressure range MPa [psi.]		0.25～0.7 [36～102]		0.2～0.7 [29～102]		0.15～0.7 [22～102]			
Proof pressure MPa [psi.]		1.05 [152]							
Operating temperature range ℃ [°F]		0～60 [32～140]							
Operating speed range mm/s [in./sec.]		30～500 [1.2～20]							
Cushion	Extended side	None (External metal stopper)							
	Retracted side	None	None (External metal stopper)	Rubber bumper	None (External metal stopper)	Rubber bumper	None (External metal stopper)	Rubber bumper	None (External metal stopper)
Stroke adjusting range mm [in.]	Extended side	−5～0 [−0.197～0]							
	Retracted side	—	−7～0 [−0.276～0]	—	−7～0 [−0.276～0]	—	−7～0 [−0.276～0]	—	−7～0 [−0.276～0]
Repeatability mm [in.]		±0.02 [±0.0008] (External metal stopper)							
Port size		M3×0.5							
Lubrication	Cylinder portion	Not required (If lubrication is required, use Turbine Oil Class 1 [ISO VG32] or equivalent.)							
	Guide portion	Required (CGL grease Nippon Thompson Co., Ltd. made) Note							
Perpendicularity of end plate mm [in.]		0.1 [0.004]							
Stroke tolerance mm [in.]		$^{+1}_{0}$ [$^{+0.039}_{0}$]							
Allowable moment N・m [in・lbf]	Mp	0.24 [2.12]		0.28 [2.48]		0.28 [2.48]		0.28 [2.48]	
	My	0.29 [2.57]		0.34 [3.01]		0.34 [3.01]		0.34 [3.01]	
	Mr	0.22 [1.95]		0.23 [2.04]		0.38 [3.36]		0.38 [3.36]	
Number of available sensor switches (optional)		1		2					

Note: Apply grease on the raceway surface of the track rail in the guide portion every 6 months or 3 million operations.

Specifications

●Cylinders with buffer

Item / Model		MGAG□4.5	MGAG□6	MGAG□8	MGAG□10	MGAG□12	MGAG□16	MGAG□20
Bore size	mm [in.]	4.5 [0.177]	6 [0.236]	8 [0.315]	10 [0.394]	12 [0.472]	16 [0.630]	20 [0.787]
Buffer stroke	mm [in.]	4 [0.157] MAX.				6 [0.236] MAX.		
Spring return force N[lbf]	At zero stroke	0.3 [0.067]			0.9 [0.202]	1.0 [0.225]	1.4 [0.315]	1.4 [0.315]
	At stroke end	0.7 [0.157]			2.0 [0.450]	2.7 [0.607]	4.3 [0.967]	4.3 [0.967]
Mounting type		Vertically downward or horizontal						
Operating speed range	mm/s [in./sec.]	30～500 [1.2～20]（When used horizontally：30～300 [1.2～12]）				20～500 [0.8～20]（When used horizontally：20～300 [0.8～12]）		

Remark: With the exception of the dedicated specification items for cylinder with buffer, the standard cylinder specifications applly to other items.

●Cylinders with end keep

Item / Model		MGAK□12	MGAK□16	MGAK□20
Bore size	mm [in.]	12 [0.472]	16 [0.630]	20 [0.787]
Operating speed range	MPa [psi.]	0.2～0.7 [29～102]		
Backlash (at end keep)	mm [in.]	1 [0.039] MAX.		

Remark: With the exception of the dedicated specification items for cylinder with end keep, the standard cylinder specifications applly to other items.

Cylinder Thrust

●Standard and Side-mounted Cylinders, Cylinders with Buffer, Cylinders with End Keep

N [lbf.]

Bore size mm [in.]	Piston rod diameter mm [in.]	Operating direction	Pressure area mm² [in.²]	Air pressure MPa [psi.] 0.1 [15]	0.2 [29]	0.3 [44]	0.4 [58]	0.5 [73]	0.6 [87]	0.7 [102]
4.5 [0.177]	2 [0.079]	Push side	15.9 [0.0246]	—	3.2 [0.72]	4.8 [1.08]	6.4 [1.44]	8.0 [1.80]	9.5 [2.14]	11.1 [2.50]
		Pull side	12.8 [0.0198]	—	2.6 [0.58]	3.8 [0.85]	5.1 [1.15]	6.4 [1.44]	7.7 [1.73]	9.0 [2.02]
6 [0.236]	3 [0.118]	Push side	28.2 [0.0437]	—	5.6 [1.26]	8.5 [1.91]	11.3 [2.54]	14.1 [3.17]	16.9 [3.80]	19.7 [4.43]
		Pull side	21.2 [0.0329]	—	4.2 [0.94]	6.4 [1.44]	8.5 [1.91]	10.6 [2.38]	12.7 [2.85]	14.8 [3.33]
8 [0.315]	3 [0.118]	Push side	50.3 [0.0780]	—	10.1 [2.27]	15.1 [3.39]	20.1 [4.52]	25.2 [5.66]	30.2 [6.79]	35.2 [7.91]
		Pull side	43.2 [0.0670]	—	8.6 [1.93]	13.0 [2.92]	17.3 [3.89]	21.6 [4.86]	25.9 [5.82]	30.2 [6.79]
10 [0.394]	4 [0.157]	Push side	78.5 [0.1217]	—	15.7 [3.53]	23.6 [5.31]	31.4 [7.06]	39.3 [8.83]	47.1 [10.59]	55.0 [12.36]
		Pull side	65.9 [0.1021]	—	13.2 [2.97]	19.8 [4.45]	26.4 [5.93]	33.0 [7.42]	39.5 [8.88]	46.1 [10.36]
12 [0.472]	5 [0.197]	Push side	113.0 [0.1752]	11.3 [2.54]	22.6 [5.08]	33.9 [7.62]	45.2 [10.16]	56.5 [12.70]	67.8 [15.24]	79.1 [17.78]
		Pull side	93.4 [0.1448]	9.3 [2.09]	18.7 [4.20]	28.0 [6.29]	37.4 [8.41]	46.7 [10.50]	56.0 [12.59]	65.4 [14.70]
16 [0.630]	6 [0.236]	Push side	201.0 [0.3116]	20.1 [4.52]	40.2 [9.04]	60.3 [13.56]	80.4 [18.07]	100.5 [22.59]	120.6 [27.11]	140.7 [31.63]
		Pull side	172.7 [0.2677]	17.3 [3.89]	34.5 [7.76]	51.8 [11.64]	69.1 [15.53]	86.4 [19.42]	103.6 [23.29]	120.9 [27.18]
20 [0.787]	8 [0.315]	Push side	314.0 [0.4867]	31.4 [7.06]	62.8 [14.12]	94.2 [21.18]	125.6 [28.23]	157.0 [35.29]	188.4 [42.35]	219.8 [49.41]
		Pull side	263.8 [0.4089]	26.4 [5.93]	52.8 [11.87]	79.1 [17.78]	105.5 [23.72]	131.9 [29.65]	158.3 [35.59]	184.6 [41.50]

●Stroke Adjusting Cylinders

N [lbf.]

Bore size mm [in.]	Piston rod diameter mm [in.]	Operating direction	Pressure area mm² [in.²]	Air pressure MPa [psi.] 0.2 [29]	0.3 [44]	0.4 [58]	0.5 [73]	0.6 [87]	0.7 [102]
4.5 [0.177]	2 [0.079]	Push side, Pull side	12.8 [0.0198]	2.6 [0.58]	3.8 [0.85]	5.1 [1.15]	6.4 [1.44]	7.7 [1.73]	9.0 [2.02]
6 [0.236]	3 [0.118]	Push side, Pull side	21.2 [0.0329]	4.2 [0.94]	6.4 [1.44]	8.5 [1.91]	10.6 [2.38]	12.7 [2.85]	14.8 [3.32]
8 [0.315]	3 [0.118]	Push side, Pull side	43.2 [0.0670]	8.6 [1.93]	13.0 [2.92]	17.3 [3.89]	21.6 [4.86]	25.9 [5.82]	30.2 [6.79]
10 [0.394]	4 [0.157]	Push side, Pull side	65.9 [0.1021]	13.2 [2.97]	19.8 [4.45]	26.4 [5.93]	33.0 [7.42]	39.5 [8.88]	46.1[10.36]

Bore Size and Stroke

mm [in.]

Bore size	Standard strokes
4.5 [0.117]	5Note, 10
6 [0.236]	5Note, 10, 15
8 [0.315]	5Note, 10, 15Note, 20
10 [0.394]	5Note, 10, 15Note, 20, 30
12 [0.472]	10Note, 20, 30Note, 40, 50Note, 60
16 [0.630]	10Note, 20, 30Note, 40, 50Note, 60
20 [0.787]	10Note, 20, 30Note, 40, 50Note, 60, 70Note, 80

Note: The collar packed is used in these strokes.

Order Codes

● ϕ 4.5 [0.177]～ ϕ 10 [0.394]

MGA [ ] [ ] [×] - [ ] - [ ] [ ] - [ ] [ ] [ ]

Mini guide slider

Functions
Blank : Standard cylinder
P : Extended side stroke adjusting cylinder
E : Extended/retracted-side stroke adjusting cylinder
L : Side-mounted cylinder
G : Cylinder with buffer
PG : Extended side stroke adjusting cylinder with buffer
EG : Extended/retracted-side stroke adjusting cylinder with buffer
LG : Side-mounted cylinder with buffer

Magnet and sensor rail Note
Blank : No magnet and sensor rail
S : With magnet and sensor rail

Bore size
×
Stroke
●See the bore size and stroke on p.604.

Piping direction
(Note: Excluding side-mounted cylinder)
R : Right side as viewed from the rod side
L : Left side as viewed from the rod side

Table direction
(Note: Side-mounted cylinder only)
R : Right side as viewed from the rod side
L : Left side as viewed from the rod side

Locating pin
Blank: No pin
P : With pin

Number of pins
1 : With 1 pin
2 : With 2 pins
3 : With 3 pins
4 : With 4 pins

Sensor switch type
Blank : No sensor switch
ZE135 : 2-lead wire, solid state type
ZE155 : 3-lead wire, solid state type
ZE235 : 2-lead wire, solid state type
ZE255 : 3-lead wire, solid state type
ZE101 : 2-lead wire, reed switch type
ZE102 : 2-lead wire, reed switch type
ZE201 : 2-lead wire, reed switch type
ZE202 : 2-lead wire, reed switch type
●For details of sensor switches, see p.1544.

Lead wire length
A : 1000mm [39in.]
B : 3000mm [118in.]

Number of sensor switches Note
1 : With 1 sensor switch
2 : With 2 sensor switches

Note: For a cylinder bore size of 4.5mm [0.177in.], the sensor rail has only 1 groove so that only 1 sensor switch can be mounted.

● ϕ 12 [0.472]～ ϕ 20 [0.787]

MGA [ ] [ ] [×] - [ ] - [ ] [ ] - [ ] [ ] - [ ] [ ] [ ]

Mini guide slider

Functions
Blank : Standard cylinder
G : Cylinder with buffer
K : Cylinder with end keep
GK : Cylinder with buffer end keep

Magnet and sensor rail
Blank : No magnet and sensor rail
S : With magnet and sensor rail

Piping direction
R : Right side as viewed from the rod side
L : Left side as viewed from the rod side

Bore size
×
Stroke
●See the bore size and stroke on p.604.

Stroke adjusting mechanism Note 1
Blank : No stroke adjusting mechanism
MS : With metal stopper
RS : With rubber stopper
SS : With shock absorber

Stroke adjusting position
Blank: No stroke adjustment
2 : Both ends (with 2 stroke adjustments) Note 2
F : Extended end (with 1 stroke adjustment) Note 3
R : Retracted end (with 1 stroke adjustment) Note 4

Locating pin
Blank : No pin
P : With pin

Number of pins
1 : With 1 pin
2 : With 2 pins
3 : With 3 pins
4 : With 4 pins

Sensor switch type
Blank : No sensor switch
ZE135 : 2-lead wire, solid state type
ZE155 : 3-lead wire, solid state type
ZE235 : 2-lead wire, solid state type
ZE255 : 3-lead wire, solid state type
ZE101 : 2-lead wire, reed switch type
ZE102 : 2-lead wire, reed switch type
ZE201 : 2-lead wire, reed switch type
ZE202 : 2-lead wire, reed switch type
●For details of sensor switches, see p.1544.

Lead wire length
A : 1000mm [39in.]
B : 3000mm [118in.]

Number of sensor switches
1 : With 1 sensor switch
2 : With 2 sensor switches

Notes: 1. Not available in cylinder with buffer end keep (GK).
2. Not available in cylinder with buffer (G) or end keep (K).
3. Not available in cylinder with buffer (G).
4. Not available in cylinder with end keep (K).

●Mini Guide Sliders ϕ 12, 16, 20 [ϕ 0.472, 0.360, 0.787] Product Range and Optional Combinations

Model	Type	Metal stopper			Rubber stopper			Shock absorber		
		Extended end -MSF	Retracted end -MSR	Both ends -MS2	Extended end -RSF	Retracted end -RSR	Both ends -RS2	Extended end -SSF	Retracted end -SSR	Both ends -SS2
MGA12, 16, 20	Standard cylinder	●	●	●	●	●	●	●	●	●
MGAG12, 16, 20	Cylinder with buffer	—	●	—	—	●	—	—	●	—
MGAK12, 16, 20	Cylinder with end keep	●	—	—	●	—	—	●	—	—
MGAGK12, 16, 20	Cylinder with buffer end keep	—	—	—	—	—	—	—	—	—

■Additional parts

●Sensor rail

S-MGA □

Applicable cylinder bore size × stroke

1 : 4.5×5, 10
2 : 6×5, 10
8×5, 10
10×5, 10
3 : 6×15
4 : 8×15, 20
10×15, 20
5 : 10×30
6 : 12×10, 20
16×10, 20
20×10, 20
7 : 12×30, 40
16×30, 40
20×30, 40
8 : 12×50, 60
16×50, 60
20×50, 60
9 : 20×70, 80

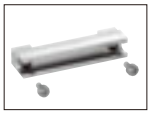

S-MGA1

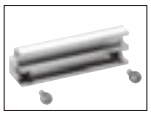

S-MGA2, 3, 4, 5
6, 7, 8, 9

●Magnet

M-MGA □

Applicable cylinder bore size

1 : 4.5
2 : 6, 8, 10
12, 16, 20

●Locating pin

P-MGA □

Applicable cylinder bore size

1 : 4.5, 6, 8, 10
2 : 12, 16, 20

Remark: For the dimensions of the additional parts (sensor rail, magnet and locating pin), see p.661.

●Stopper and shock absorber

Bore size	Metal stopper type	Rubber stopper type	Shock absorber type
12 [0.472in.]	**CRK565**	**CRK570**	**KSHA4×4-BD**
16 [0.630in.]	**CRK566**	**CRK571**	**KSHA5×5-E**
20 [0.787in.]	**CRK567**	**CRK572**	**KSHA6×8-E**

Remark: The set includes a mounting nut.

Metal stopper

Rubber stopper

Shock absorber

Remark: For the dimensions of the metal stopper and rubber stopper, see p.661.
Also, for the dimensions of the shock absorber unit, see the General Catalog of Air Treatment, Auxiliary, Vacuum.

●Stroke adjusting bracket set Note 1

□ **- MGA** □

Combination of bracket set

K2 : ①+②+③ Note 2, 3
KF : ①+② Note 3
KR : ①+③ Note 2

Notes: 1. These sets do not include the shock absorber and stopper bolt.
2. Cannot be mounted on the cylinder with end keep.
3. Cannot be mounted on the cylinder with buffer.
4. When using the shock absorber, do not use the set screw.

Applicable cylinder bore size and stroke

Model	Applicable cylinder bore size × stroke
1	12×10, 30, 50
2	12×20, 40, 60
3	16×10, 30, 50
4	16×20, 40, 60
5	20×10, 30, 50, 70
6	20×20, 40, 60, 80

①Stopper

②Bracket A

③Bracket B

Mass

● ϕ 4.5 [0.177]～ ϕ 10 [0.394]

g [oz.]

Bore size mm[in.]	Stroke mm	Standard (MGA)	Extended side stroke adjustment (MGAP)	Extended/retracted-side stroke adjustment (MGAE)	Side-mounted (MGAL)	Additional mass			
		No magnet and sensor rail	No magnet and sensor rail	No magnet and sensor rail	No magnet and sensor rail	With magnet and sensor rail	With buffer	Sensor switch (1 pc.)	
								ZE□□□A	ZE□□□B
4.5 [0.177]	5	42 [1.48]	49 [1.73]	52 [1.83]	59 [2.08]	4 [0.14]	3 [0.11]	15 [0.53]	35 [1.24]
	10	42 [1.48]	49 [1.73]	52 [1.83]	59 [2.08]	4 [0.14]	3 [0.11]		
6 [0.236]	5	58 [2.05]	68 [2.40]	71 [2.50]	78 [2.75]	5 [0.18]	4 [0.14]	15 [0.53]	35 [1.24]
	10	58 [2.05]	68 [2.40]	71 [2.50]	78 [2.75]	5 [0.18]	4 [0.14]		
	15	66 [2.33]	77 [2.72]	80 [2.82]	88 [3.10]	6 [0.21]	4 [0.14]		
8 [0.315]	5	83 [2.93]	97 [3.42]	100 [3.53]	106 [3.74]	5 [0.18]	5 [0.18]	15 [0.53]	35 [1.24]
	10	83 [2.93]	97 [3.42]	100 [3.53]	106 [3.74]	5 [0.18]	5 [0.18]		
	15	104 [3.67]	120 [4.23]	123 [4.34]	132 [4.66]	6 [0.21]	5 [0.18]		
	20	104 [3.67]	120 [4.23]	123 [4.34]	132 [4.66]	6 [0.21]	5 [0.18]		
10 [0.394]	5	103 [3.63]	126 [4.44]	129 [4.55]	132 [4.66]	5 [0.18]	6 [0.21]	15 [0.53]	35 [1.24]
	10	103 [3.63]	126 [4.44]	129 [4.55]	132 [4.66]	5 [0.18]	6 [0.21]		
	15	130 [4.59]	155 [5.47]	158 [5.57]	163 [5.75]	6 [0.21]	6 [0.21]		
	20	130 [4.59]	155 [5.47]	158 [5.57]	163 [5.75]	6 [0.21]	6 [0.21]		
	30	157 [5.54]	182 [6.42]	185 [6.53]	194 [6.84]	7 [0.25]	6 [0.21]		

● ϕ 12 [0.472]～ ϕ 20 [0.757]

g [oz.]

Bore size mm[in.]	Stroke mm	Body mass	Additional mass									
			With buffer	With end keep	With magnet and sensor rail	Stroke adjusting bracket			Metal or rubber stopper (1 pc.)	Shock absorber (1 pc.)	Sensor switch (1 pc.)	
						-□S2	-□SF	-□SR			ZE□□□A	ZE□□□B
12 [0.472]	10	211 [7.44]	15 [0.53]	36 [1.27]	12 [0.42]	31 [1.09]	19 [0.67]	27 [0.95]	4 [0.14]	4 [0.14]	15 [0.53]	35 [1.24]
	20	211 [7.44]	15 [0.53]	36 [1.27]	12 [0.42]	27 [0.95]	15 [0.53]	23 [0.81]				
	30	283 [9.98]	15 [0.53]	36 [1.27]	17 [0.60]	31 [1.09]	19 [0.67]	27 [0.95]				
	40	283 [9.98]	15 [0.53]	36 [1.27]	17 [0.60]	27 [0.95]	15 [0.53]	23 [0.81]				
	50	355 [12.52]	15 [0.53]	36 [1.27]	22 [0.78]	31 [1.09]	19 [0.67]	27 [0.95]				
	60	355 [12.52]	15 [0.53]	36 [1.27]	22 [0.78]	27 [0.95]	15 [0.53]	23 [0.81]				
16 [0.630]	10	328 [11.57]	20 [0.71]	50 [1.76]	12 [0.42]	60 [2.12]	35 [1.24]	52 [1.83]	8 [0.28]	7 [0.25]	15 [0.53]	35 [1.24]
	20	328 [11.57]	20 [0.71]	50 [1.76]	12 [0.42]	53 [1.87]	28 [0.99]	45 [1.59]				
	30	431 [15.20]	20 [0.71]	50 [1.76]	17 [0.60]	60 [2.12]	35 [1.24]	52 [1.83]				
	40	431 [15.20]	20 [0.71]	50 [1.76]	17 [0.60]	53 [1.87]	28 [0.99]	45 [1.59]				
	50	534 [18.84]	20 [0.71]	50 [1.76]	22 [0.78]	60 [2.12]	35 [1.24]	52 [1.83]				
	60	534 [18.84]	20 [0.71]	50 [1.76]	22 [0.78]	53 [1.87]	28 [0.99]	45 [1.59]				
20 [0.787]	10	515 [18.17]	26 [0.92]	67 [2.36]	12 [0.42]	74 [2.61]	40 [1.41]	60 [2.12]	15 [0.53]	20 [0.71]	15 [0.53]	35 [1.24]
	20	515 [18.17]	26 [0.92]	67 [2.36]	12 [0.42]	67 [2.36]	33 [1.16]	53 [1.87]				
	30	659 [23.25]	26 [0.92]	67 [2.36]	17 [0.60]	74 [2.61]	40 [1.41]	60 [2.12]				
	40	659 [23.25]	26 [0.92]	67 [2.36]	17 [0.60]	67 [2.36]	33 [1.16]	53 [1.87]				
	50	803 [28.33]	26 [0.92]	67 [2.36]	22 [0.78]	74 [2.61]	40 [1.41]	60 [2.12]				
	60	803 [28.33]	26 [0.92]	67 [2.36]	22 [0.78]	67 [2.36]	33 [1.16]	53 [1.87]				
	70	947 [33.40]	26 [0.92]	67 [2.36]	27 [0.95]	74 [2.61]	40 [1.41]	60 [2.12]				
	80	947 [33.40]	26 [0.92]	67 [2.36]	27 [0.95]	67 [2.36]	33 [1.16]	53 [1.87]				

Inner Construction (Standard Cylinder)

MGA□4.5

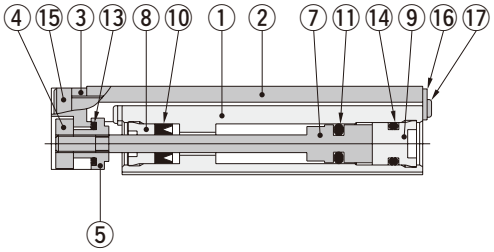

MGA□6, 8

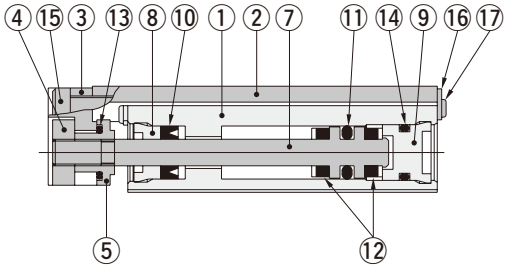

MGA□10～□20

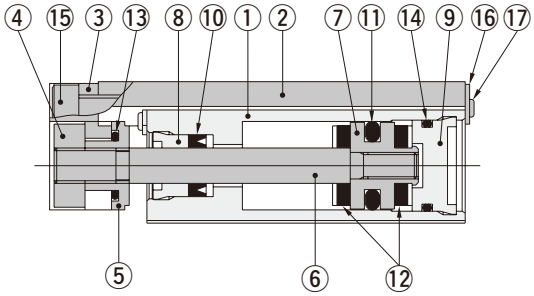

MGAS□ (With magnet and sensor rail)

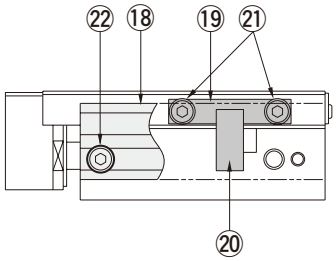

MGA□12～□20 (With shock absorber)

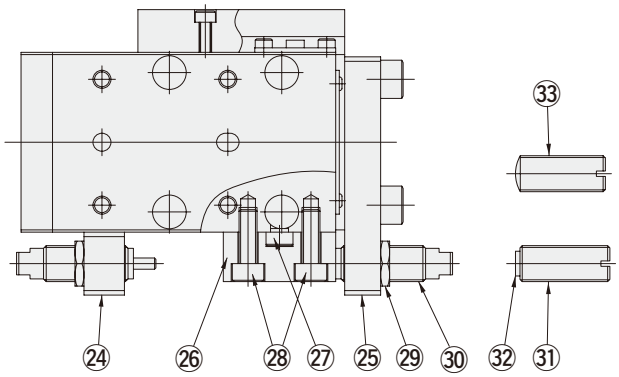

Locating pin

Major Parts and Materials

No.	Parts \ Model	MGA□4.5	MGA□6	MGA□8	MGA□10～□20
①	Body	Stainless steel (heat treated)			
②	Table	Stainless steel (heat treated)			
③	Plate	Aluminum alloy (special wear-resistant treatment)			
④	Nut A	Stainless steel			
⑤	Nut B	Stainless steel			
⑥	Piston rod	—			Stainless steel
⑦	Piston Note	Stainless steel			Aluminum alloy (special rust prevention treatment)
⑧	Rod cap	Oil impregnated plastic bushing (polyacetal)			
⑨	Head cap	Plastic			
⑩	Rod seal	Synthetic rubber (NBR)			
⑪	Piston seal	Synthetic rubber (NBR)			
⑫	Bumper	—	Synthetic rubber (urethane)		
⑬	O-ring	Synthetic rubber (NBR)			
⑭	O-ring	Synthetic rubber (NBR)			
⑮	Bolt	Stainless steel			
⑯	Holder plate	Stainless steel			
⑰	Screw	Stainless steel			
⑱	Sensor rail	Aluminum alloy (anodized)			
⑲	Magnet holder	Aluminum alloy (anodized)			
⑳	Magnet	Plastic magnet			
㉑	Bolt	Stainless steel			
㉒	Bolt	Stainless steel			
㉓	Locating pin	Steel (heat treated)			

Note: In **MGA□4.5, MGA□6** and **MGA□8,** a piston and piston rod are combined as single-piece construction.

No.	Parts \ Model	MGA□12～□20
㉔	Bracket A	Aluminum alloy (anodized)
㉕	Bracket B	Aluminum alloy (anodized)
㉖	Stopper	Steel (heat treatment and nickel plated)
㉗	Locating pin	Steel (heat treated)
㉘	Bolt	Stainless steel
㉙	Nut	Mild steel (zinc plated)
㉚	Shock absorber	—
㉛	Adjusting bolt	Steel (nickel plated)
㉜	Bumper	Synthetic rubber (NBR)
㉝	Adjusting bolt	Steel (heat treatment and nickel plated)

Inner Construction (Extended Side Stroke Adjusting Cylinder)

MGAP□4.5

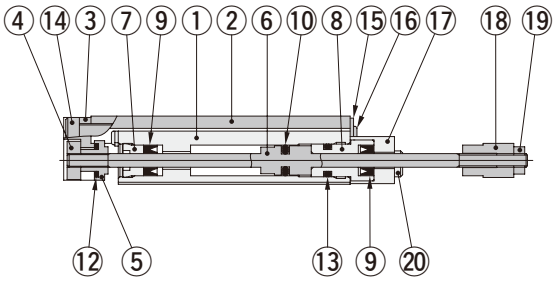

MGAP□6, 8, 10

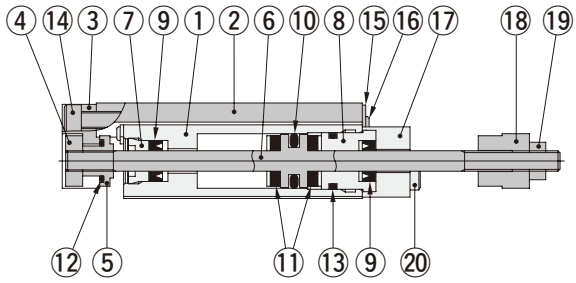

MGAPS□(With magnet and sensor rail)

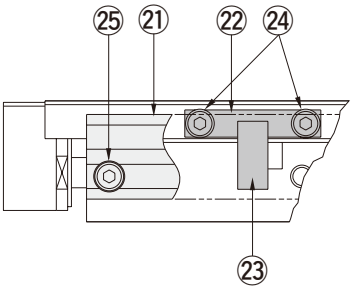

Locating pin

Major Parts and Materials

No.	Parts \ Model	MGAP□4.5	MGAP□6	MGAP□8	MGAP□10
①	Body	Stainless steel (heat treated)			
②	Table	Stainless steel (heat treated)			
③	Plate	Aluminum alloy (special wear-resistant treatment)			
④	Nut A	Stainless steel			
⑤	Nut B	Stainless steel			
⑥	Piston	Stainless steel			
⑦	Rod cap	Oil impregnated plastic bushing (polyacetal)			
⑧	Head cap	Aluminum alloy (special wear-resistant treatment)			
⑨	Rod seal	Synthetic rubber (NBR)			
⑩	Piston seal	Synthetic rubber (NBR)			
⑪	Bumper	—	Synthetic rubber (urethane)		
⑫	O-ring	Synthetic rubber (NBR)			
⑬	O-ring	Synthetic rubber (NBR)			
⑭	Bolt	Stainless steel			
⑮	Holder plate	Stainless steel			
⑯	Screw	Stainless steel			
⑰	Stopper	Steel (heat treatment and nickel plated)			
⑱	Adjusting nut	Steel (heat treatment and nickel plated)			
⑲	Hexagon nut	Stainless steel	Mild steel (zinc plated)		
⑳	Bolt	Stainless steel			
㉑	Sensor rail	Aluminum alloy (anodized)			
㉒	Magnet holder	Aluminum alloy (anodized)			
㉓	Magnet	Plastic magnet			
㉔	Bolt	Stainless steel			
㉕	Bolt	Stainless steel			
㉖	Locating pin	Steel (heat treated)			

Inner Construction (Extended/Retraced Side Stroke Adjusting Cylinder)

MGAE□4.5

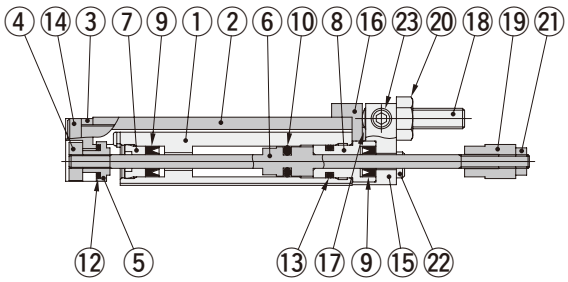

MGAE□6, 8, 10

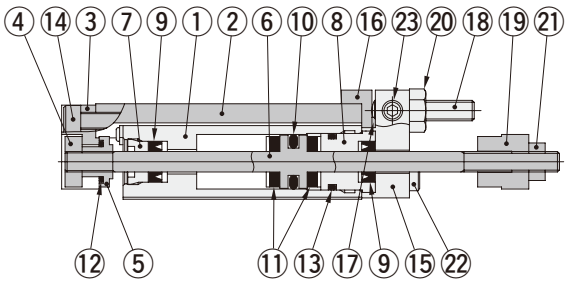

MGAES□(With magnet and sensor rail)

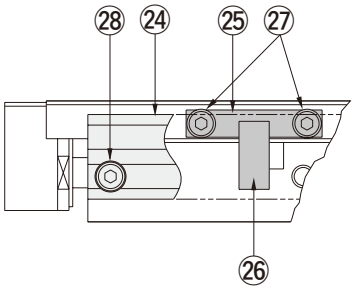

Locating pin

Major Parts and Materials

No.	Model / Parts	MGAE□4.5	MGAE□6	MGAE□8	MGAE□10
①	Body	Stainless steel (heat treated)			
②	Table	Stainless steel (heat treated)			
③	Plate	Aluminum alloy (special wear-resistant treatment)			
④	Nut A	Stainless steel			
⑤	Nut B	Stainless steel			
⑥	Piston	Stainless steel			
⑦	Rod cap	Oil impregnated plastic bushing (polyacetal)			
⑧	Head cap	Aluminum alloy (special wear-resistant treatment)			
⑨	Rod seal	Synthetic rubber (NBR)			
⑩	Piston seal	Synthetic rubber (NBR)			
⑪	Bumper	—	Synthetic rubber (urethane)		
⑫	O-ring	Synthetic rubber (NBR)			
⑬	O-ring	Synthetic rubber (NBR)			
⑭	Bolt	Stainless steel			
⑮	Stopper A	Steel (heat treatment and nickel plated)			
⑯	Stopper B	Steel (heat treatment and nickel plated)			
⑰	Screw	Stainless steel			
⑱	Stopper bolt	Stainless steel (heat treated)			
⑲	Adjusting nut	Steel (heat treatment and nickel plated)			
⑳	Hexagon nut	Stainless steel			
㉑	Hexagon nut	Stainless steel	Mild steel (nickel plated)		
㉒	Bolt	Stainless steel			
㉓	Screw	Stainless steel			
㉔	Sensor rail	Aluminum alloy (anodized)			
㉕	Magnet holder	Aluminum alloy (anodized)			
㉖	Magnet	Plastic magnet			
㉗	Bolt	Stainless steel			
㉘	Bolt	Stainless steel			
㉙	Locating pin	Steel (heat treated)			

Inner Construction (Side-mounted Cylinder)

MGAL□4.5

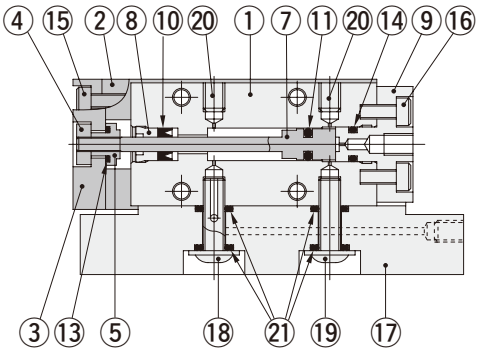

MGAL□6, 8

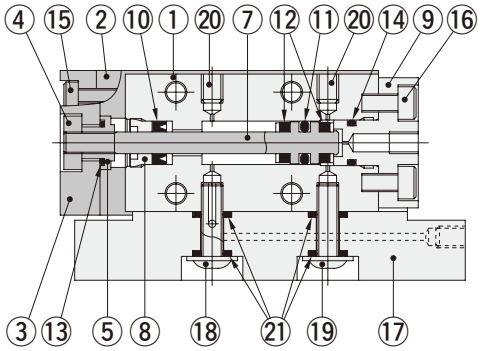

MGAL□10

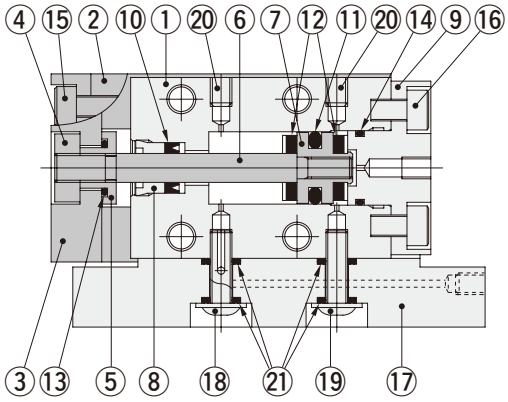

MGAS□ (With magnet and sensor rail)

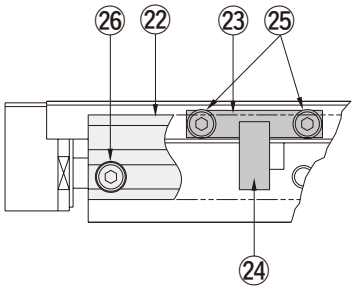

Locating pin

Major Parts and Materials

No.	Parts \ Model	MGAL□4.5	MGAL□6	MGAL□8	MGAL□10
①	Body	Stainless steel (heat treated)			
②	Table	Stainless steel (heat treated)			
③	Plate	Aluminum alloy (special wear-resistant treatment)			
④	Nut A	Stainless steel			
⑤	Nut B	Stainless steel			
⑥	Piston rod	—			Stainless steel
⑦	Piston Note	Stainless steel			Aluminum alloy (special wear-resistant treatment)
⑧	Rod cap	Oil impregnated plastic bushing (polyacetal)			
⑨	Head cover	Aluminum alloy (anodized)			
⑩	Rod seal	Synthetic rubber (NBR)			
⑪	Piston seal	Synthetic rubber (NBR)			
⑫	Bumper	—	Synthetic rubber (urethane)		
⑬	O-ring	Synthetic rubber (NBR)			
⑭	O-ring	Synthetic rubber (NBR)			
⑮	Bolt	Stainless steel			
⑯	Bolt	Stainless steel			
⑰	Base	Aluminum alloy (anodized)			
⑱	Bolt	Stainless steel			
⑲	Bolt	Stainless steel			
⑳	Screw	Stainless steel			
㉑	O-ring	Synthetic rubber (NBR)			
㉒	Sensor rail	Aluminum alloy (anodized)			
㉓	Magnet holder	Aluminum alloy (anodized)			
㉔	Magnet	Plastic magnet			
㉕	Bolt	Stainless steel			
㉖	Bolt	Stainless steel			
㉗	Locating pin	Steel (heat treated)			

Note: In **MGAL□4.5, MGAL□6** and **MGAL□8,** a piston and piston rod are combined as single-piece construction.

Inner Construction (Cylinder with Buffer End Keep)

Note: The diagrams show cylinder with buffer end keep.

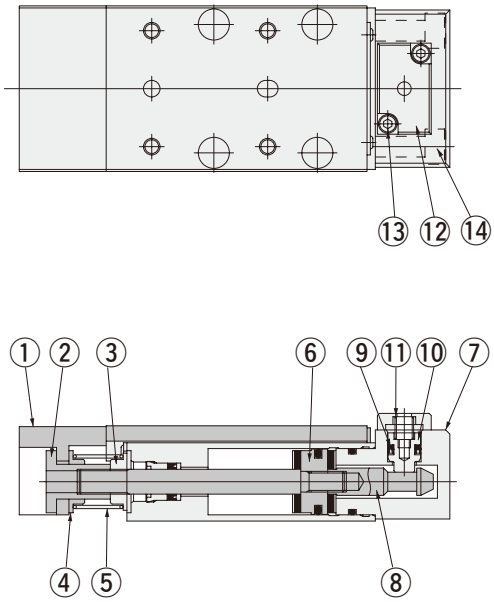

Major Parts and Materials

No.	Parts \ Model	Cylinder with buffer **MGAG□4.5～□20**	Cylinder with buffer end keep **MGAGK□12～□20**	Cylinder with end keep **MGAK□12～□20**
①	Plate	Aluminum alloy (special wear-resistant treatment)		—
②	Nut A	Stainless steel		—
③	Nut B	Stainless steel		—
④	Support	Copper alloy		—
⑤	Spring	Stainless steel		—
⑥	Piston	—	Aluminum alloy (special wear-resistant treatment)	
⑦	Head cover	—	Aluminum alloy (anodized)	
⑧	Lock end	—	Stainless steel	
⑨	Piston seal	—	Synthetic rubber (NBR)	
⑩	Lock piston	—	Stainless steel	
⑪	Spring	—	Stainless steel	
⑫	Cover	—	Aluminum alloy (anodized)	
⑬	Bolt	—	Stainless steel	
⑭	Bolt	—	Stainless steel	

Dimensions of Bore Size ϕ 4.5 [0.177] mm [in.]

●Standard cylinder

MGA□4.5

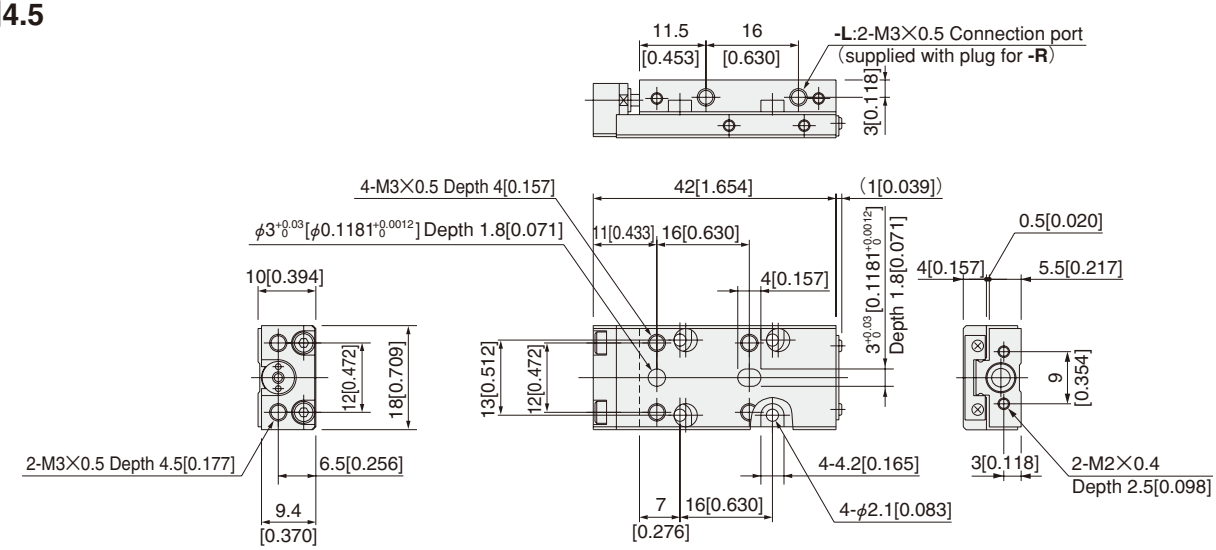

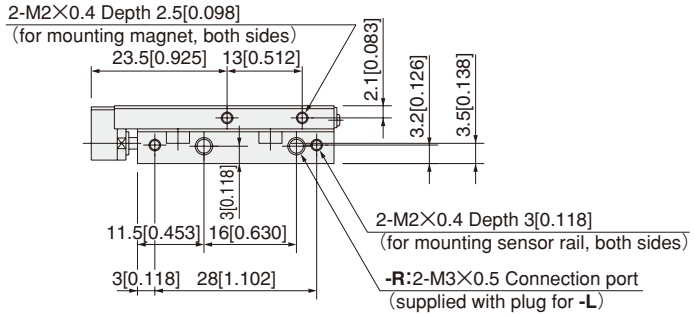

In the case of magnet and sensor rail installed
(Piping direction:-R)

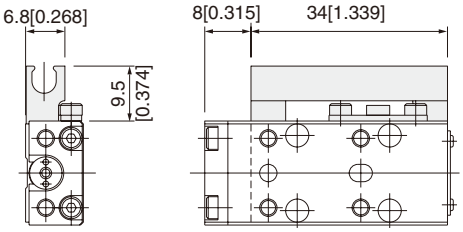

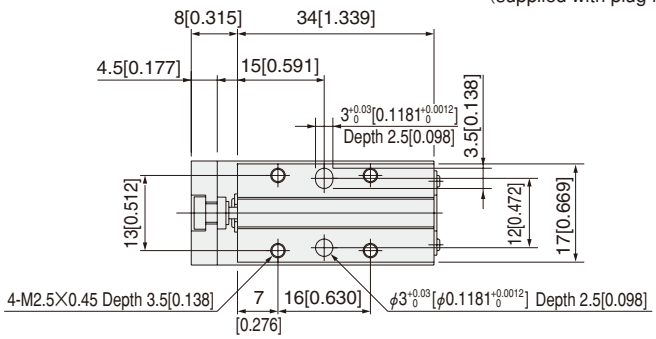

In the case of magnet and sensor rail installed
(Piping direction:-L)

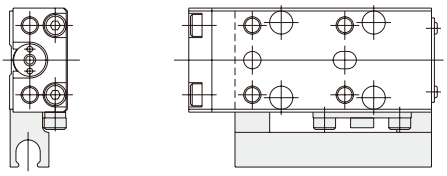

Locating pin: -P (P-MGA1)

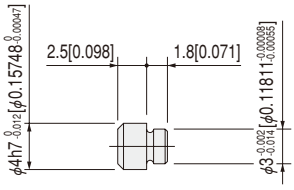

Dimensions of Bore Size ϕ4.5 [0.177] mm [in.]

●Extended side stroke adjusting cylinder

MGAP□4.5

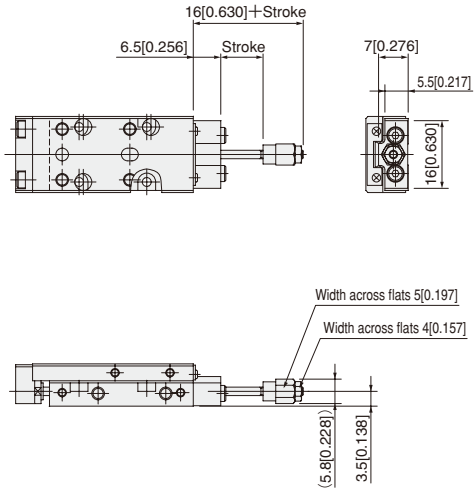

●Extended/retracted-side stroke adjusting cylinder

MGAE□4.5

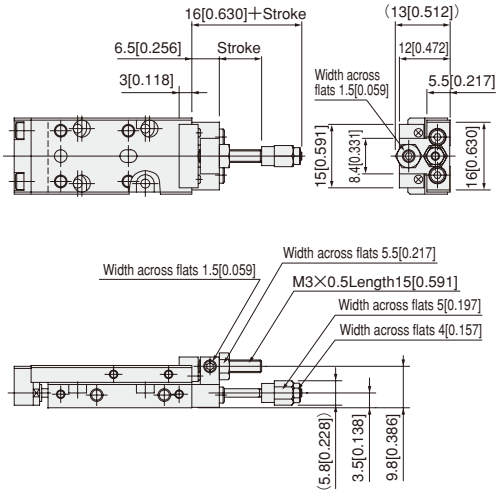

Note: For dimensions not shown in the above, see p.613.

●Cylinder with buffer

MGAG□4.5

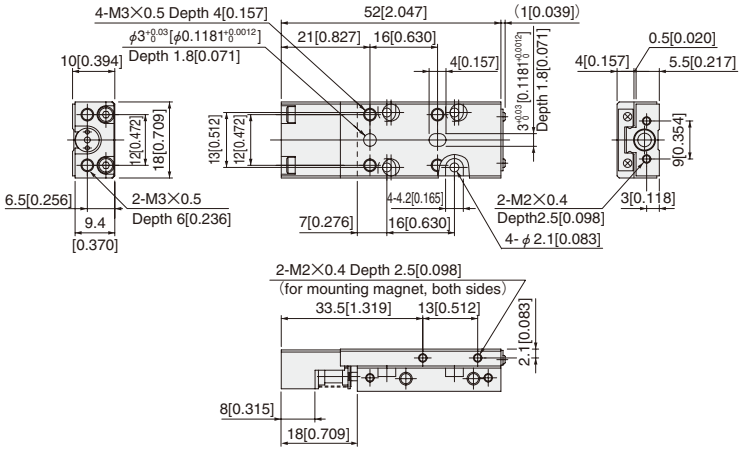

●Extended side stroke adjusting cylinder with buffer

MGAPG□4.5

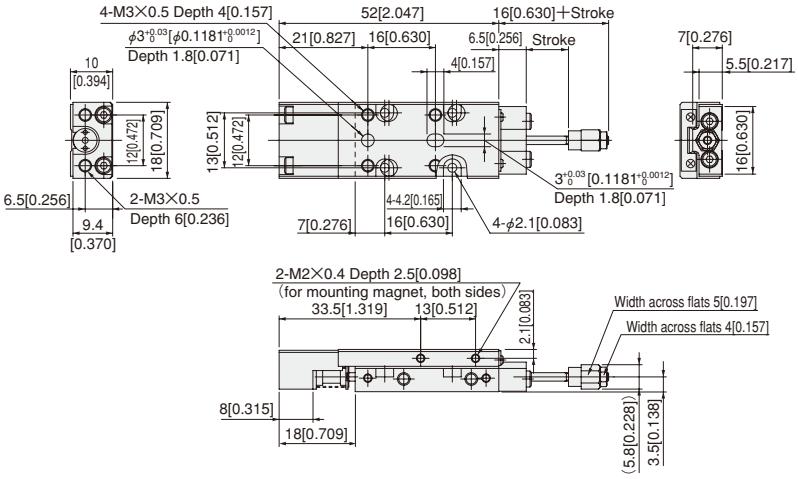

●Extended/retracted-side stroke adjusting cylinder with buffer

MGAEG□4.5

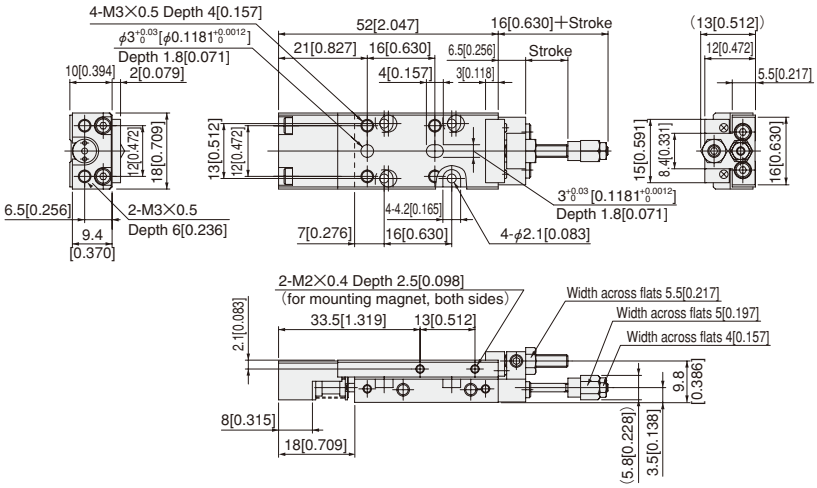

Remark: The buffer stroke of ϕ4.5 [0.177] cylinder with buffer is a maximum of 4mm [0.157in.].

Dimensions of Bore Size ϕ 4.5 [0.177] mm [in.]

●Side-mounted cylinder (right side)

MGAL□4.5×Stroke-R

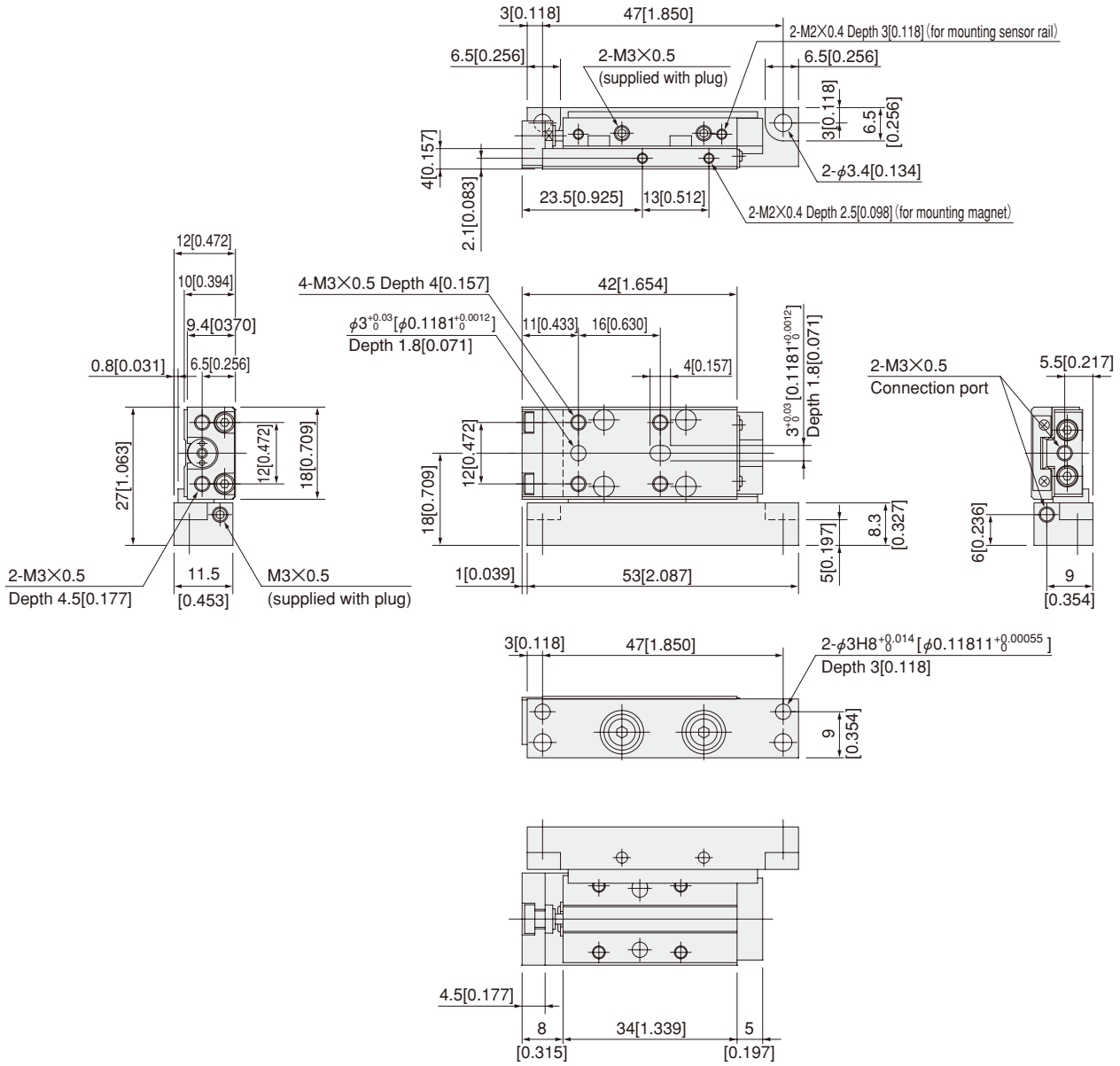

In the case of magnet and sensor rail installed

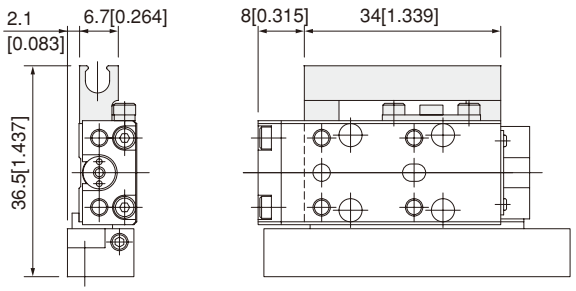

Locating pin: -P (P-MGA1)

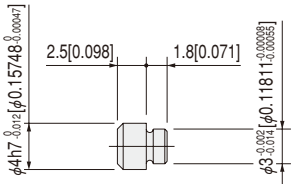

Dimensions of Bore Size ϕ 4.5 [0.177] mm [in.]

●Side-mounted cylinder (left side)

MGAL□4.5×Stroke-L

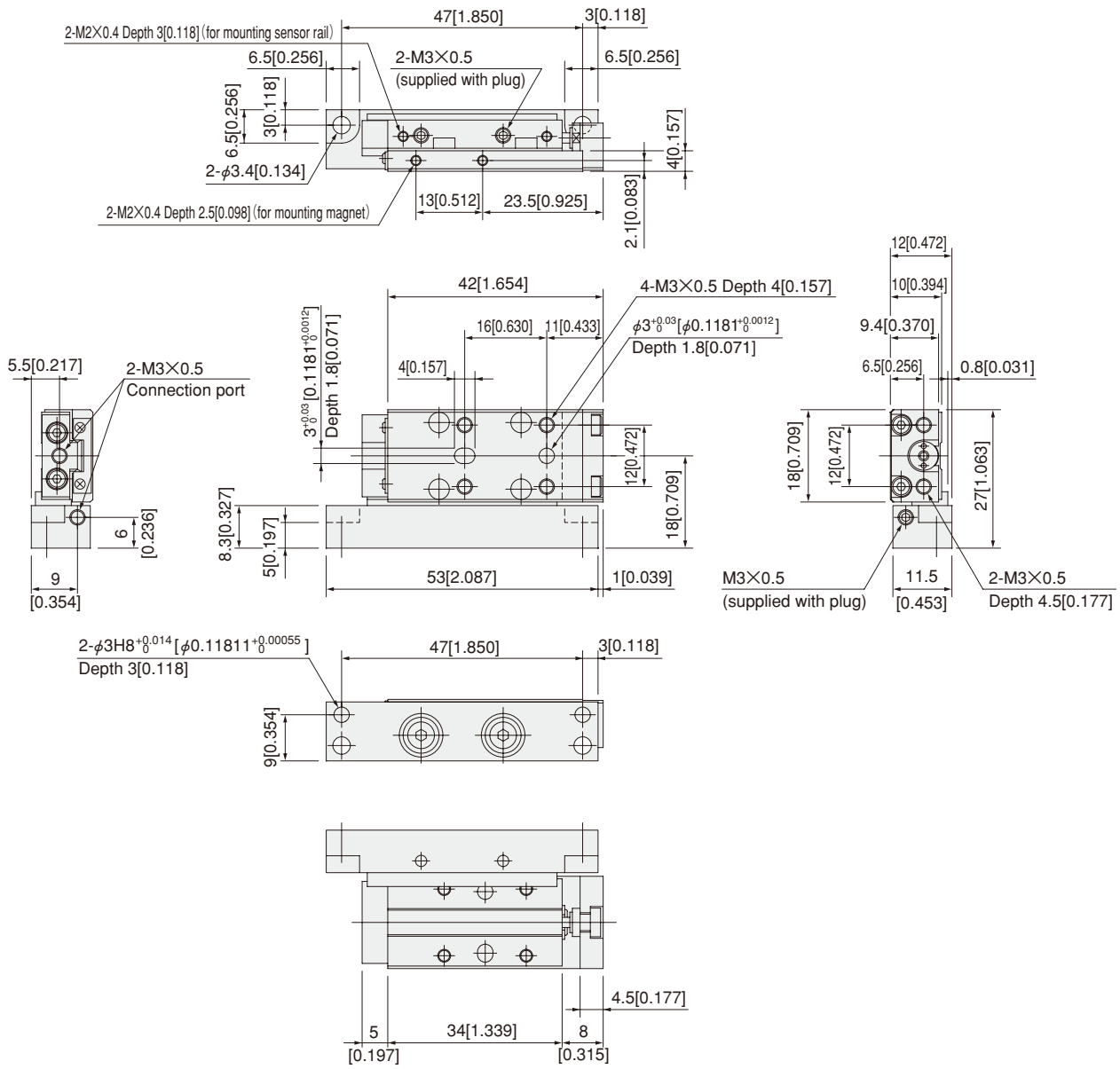

In the case of magnet and sensor rail installed

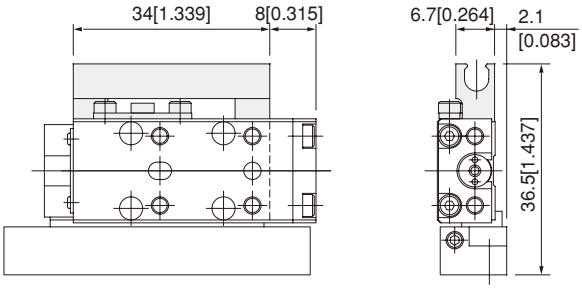

Locating pin: -P (P-MGA1)

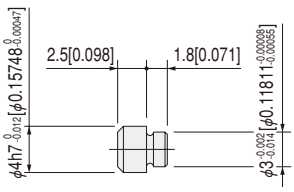

Dimensions of Bore Size ϕ4.5 [0.177] mm [in.]

●Side-mounted cylinder with buffer (right side)

MGALG□4.5×Stroke-R

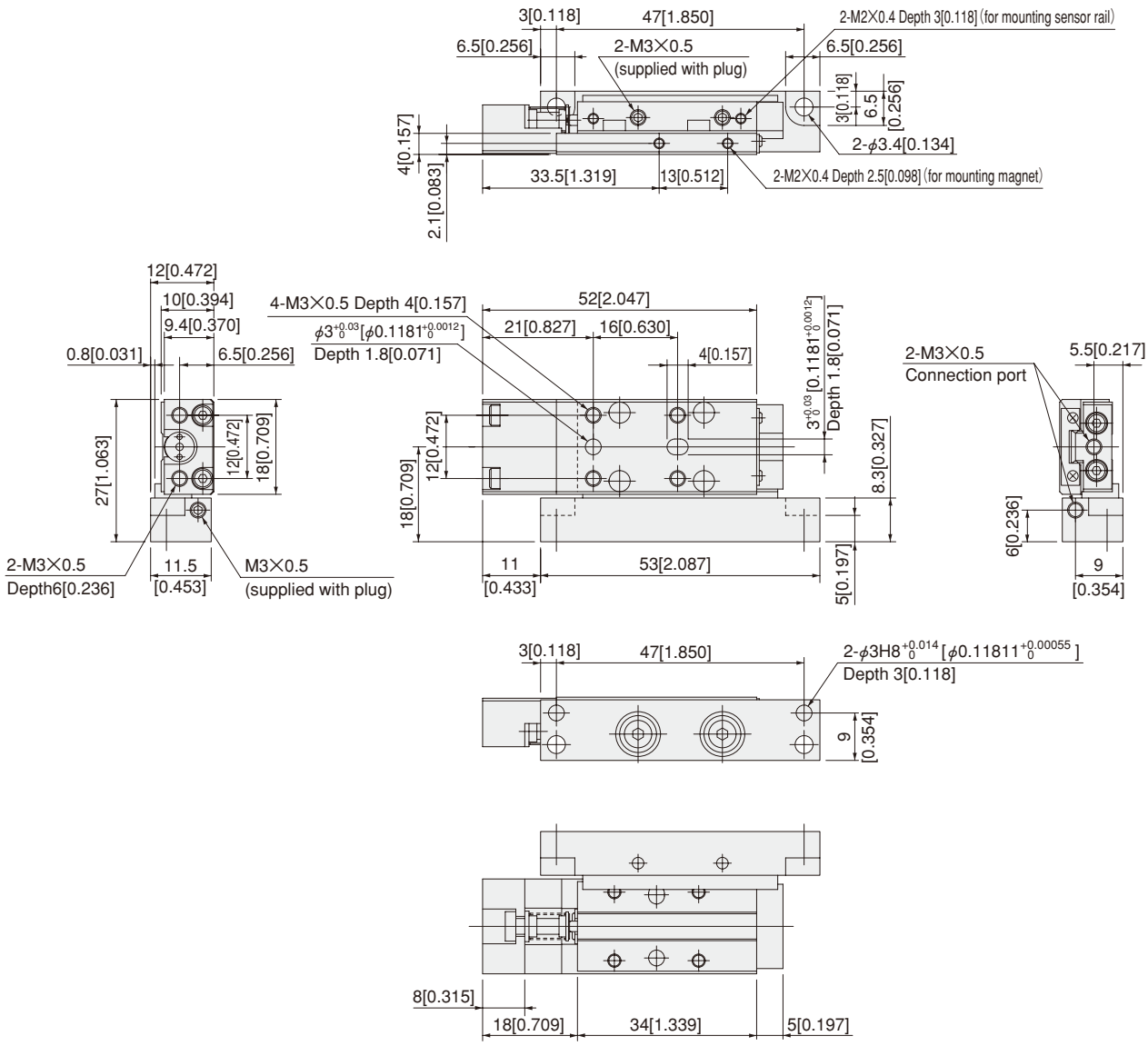

In the case of magnet and sensor rail installed

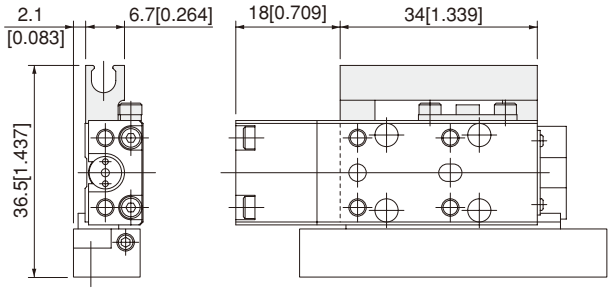

Locating pin: -P (P-MGA1)

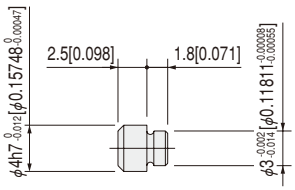

Remark: The buffer stroke of ϕ4.5 [0.177] cylinder with buffer is a maximum of 4mm [0.157in.].

Dimensions of Bore Size ϕ4.5 [0.177] mm [in.]

●Side-mounted cylinder with buffer (left side)

MGALG□4.5×Stroke-L

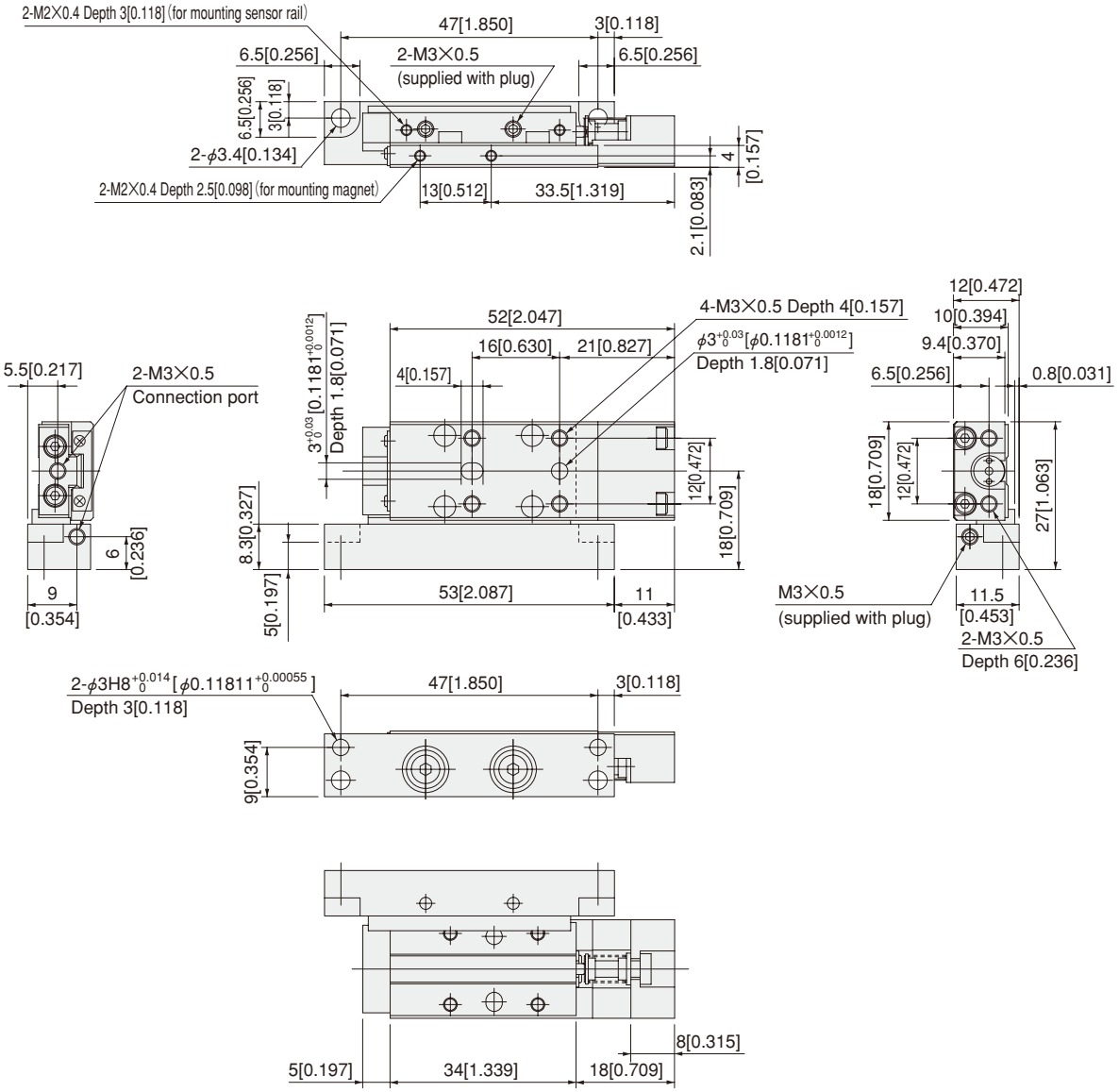

Locating pin: -P (P-MGA1)

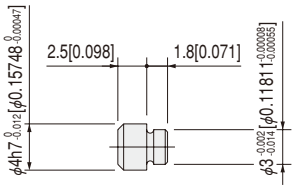

In the case of magnet and sensor rail installed

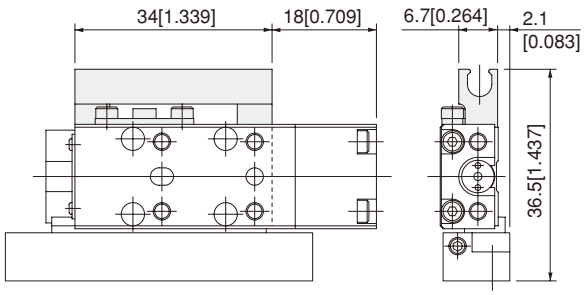

Remark: The buffer stroke of ϕ4.5 [0.177] cylinder with buffer is a maximum of 4mm [0.157in.].

Dimensions of Bore Size ϕ6 [0.236] mm [in.]

●Standard cylinder

MGA□6

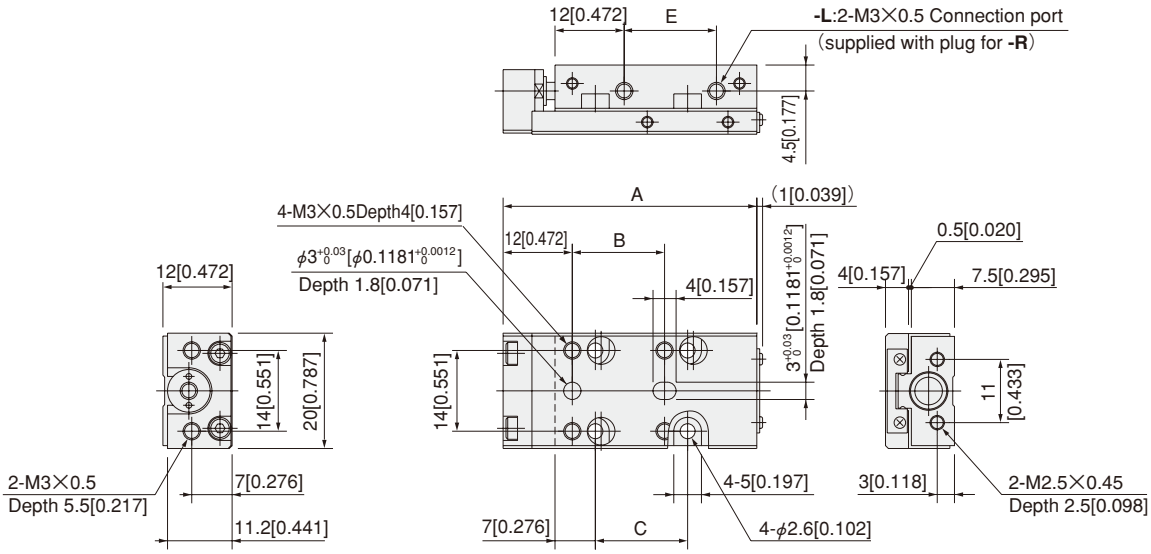

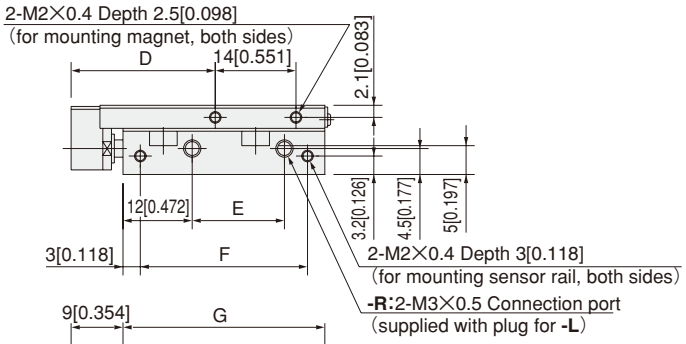

In the case of magnet and sensor rail installed
(Piping direction:-R)

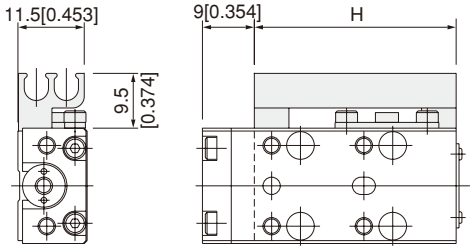

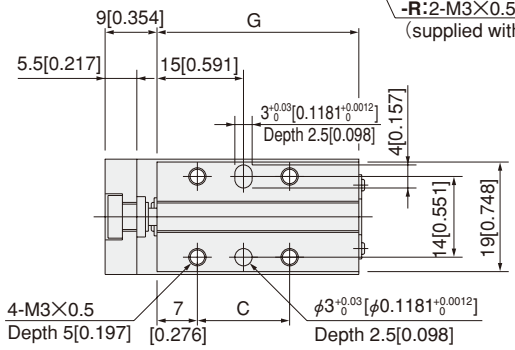

In the case of magnet and sensor rail installed
(Piping direction:-L)

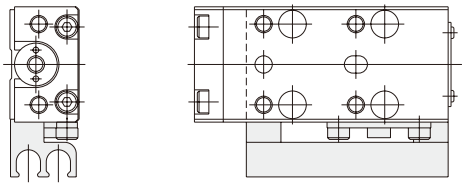

Locating pin: -P (P-MGA1)

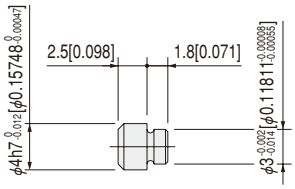

Stroke	A	B	C	D	E	F	G	H
5	44 [1.732]	16 [0.630]	16 [0.630]	25 [0.984]	16 [0.630]	29 [1.142]	35 [1.378]	35 [1.378]
10	44 [1.732]	16 [0.630]	16 [0.630]	25 [0.984]	16 [0.630]	29 [1.142]	35 [1.378]	35 [1.378]
15	49 [1.929]	21 [0.827]	21 [0.827]	30 [1.181]	21 [0.827]	34 [1.339]	40 [1.575]	40 [1.575]

Dimensions of Bore Size ϕ6 [0.236] mm [in.]

●Extended side stroke adjusting cylinder

MGAP□6

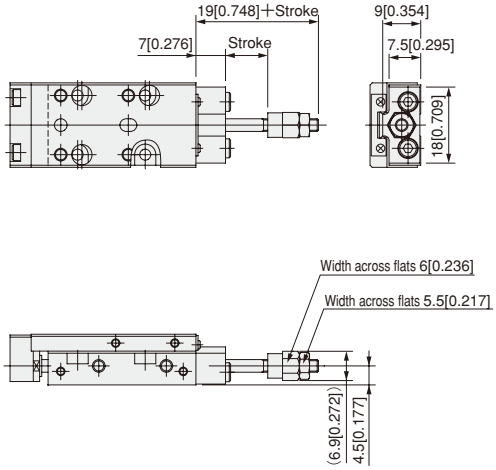

●Extended/retracted-side stroke adjusting cylinder

MGAE□6

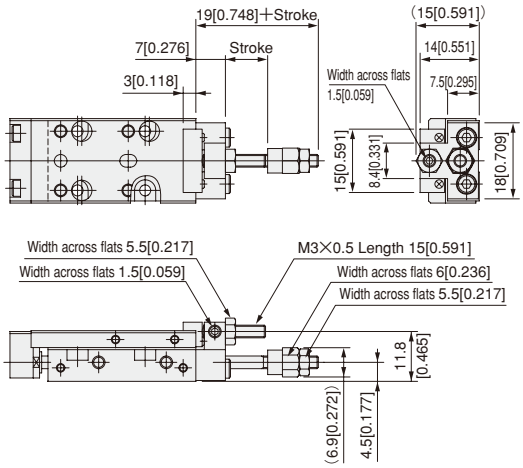

Note: For dimensions not shown in the above, see p.619.

Stroke	A	B	C	D
5	54 [2.126]	16 [0.630]	16 [0.630]	35 [1.378]
10	54 [2.126]	16 [0.630]	16 [0.630]	35 [1.378]
15	59 [2.323]	21 [0.827]	21 [0.827]	40 [1.575]

●Cylinder with buffer

MGAG□6

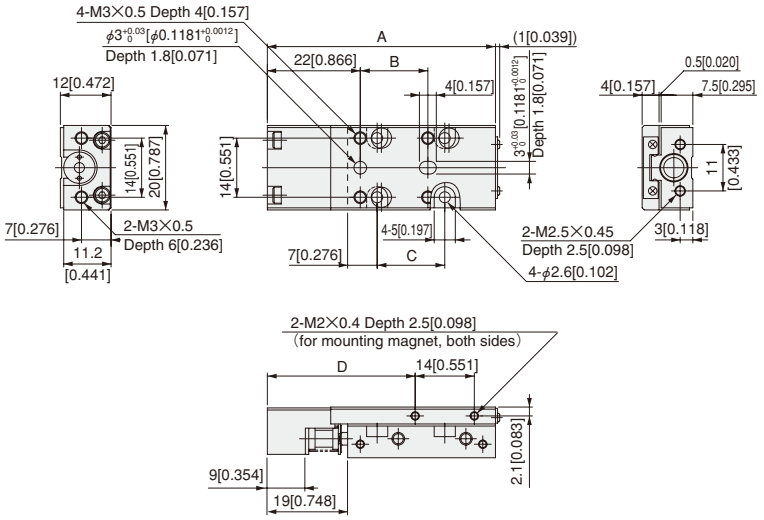

●Extended side stroke adjusting cylinder with buffer

MGAPG□6

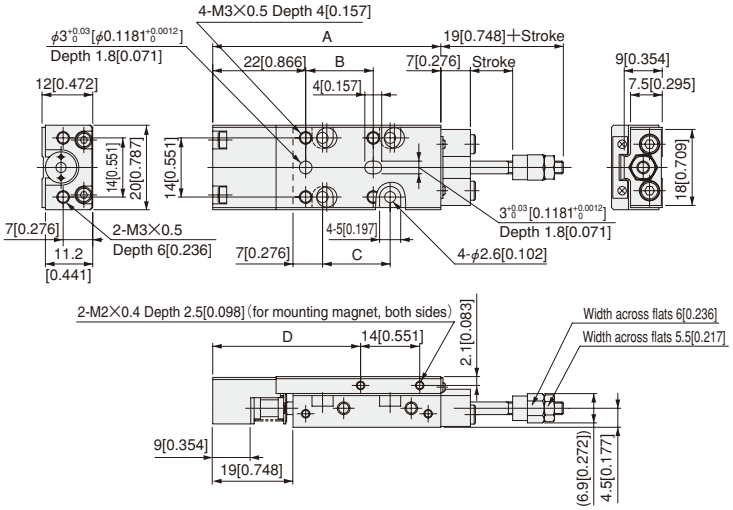

●Extended/retracted-side stroke adjusting cylinder with buffer

MGAEG□6

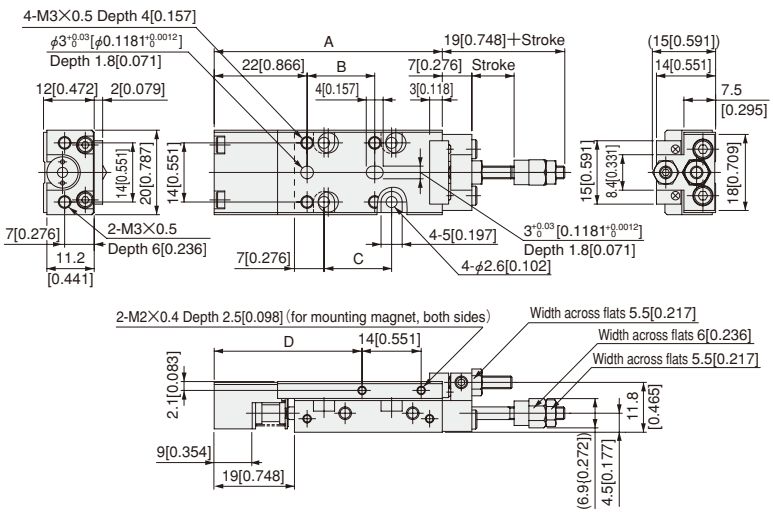

Remark: The buffer stroke of ϕ6 [0.236] cylinder with buffer is a maximum of 4mm [0.157in.].

Dimensions of Bore Size ϕ6 [0.236] mm [in.]

●Side-mounted cylinder (right side)

MGAL□6×Stroke-R

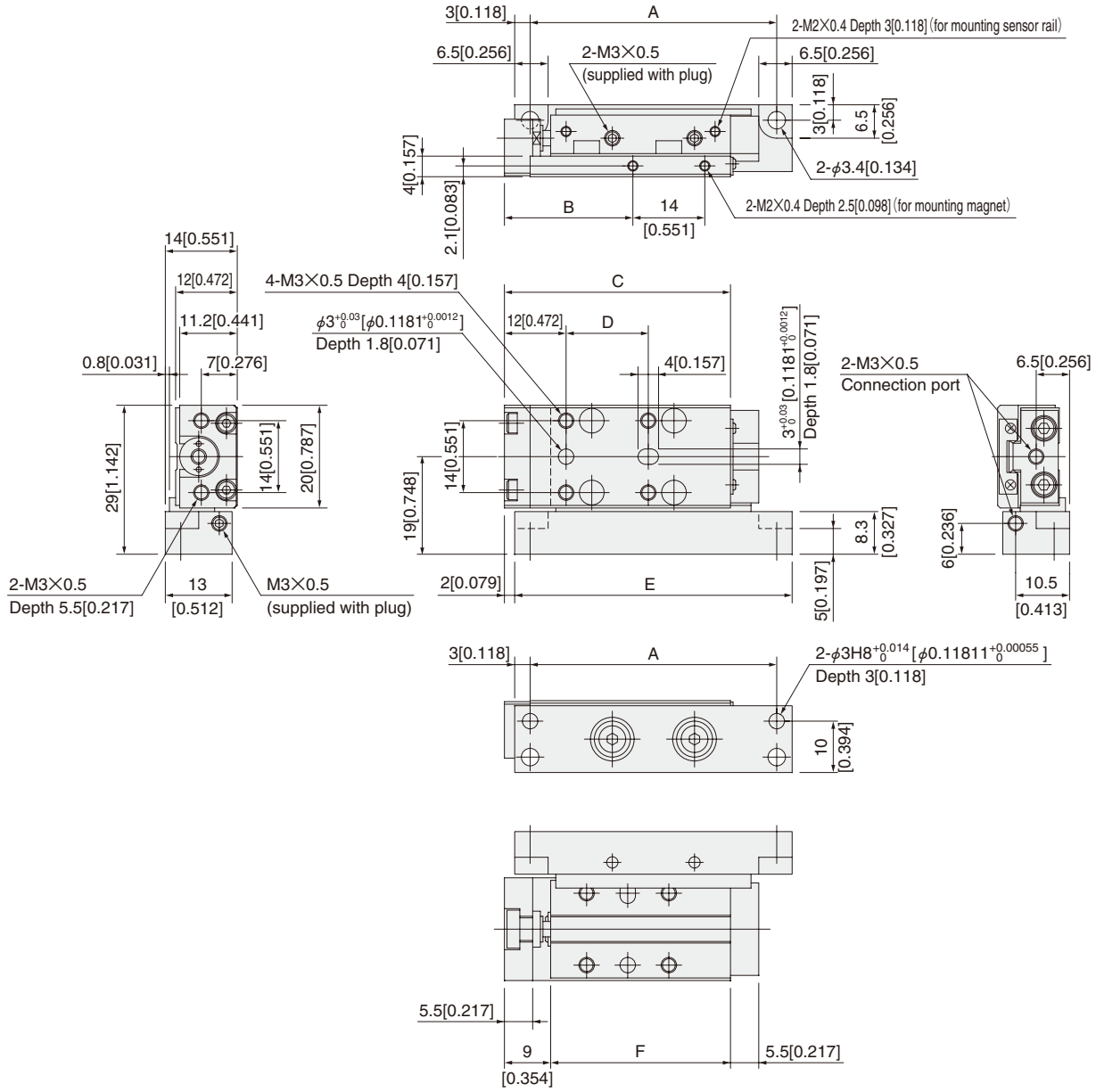

In the case of magnet and sensor rail installed

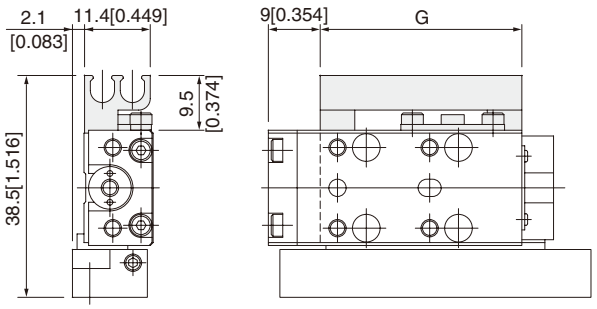

Locating pin: -P (P-MGA1)

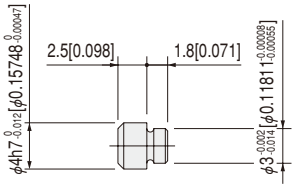

Stroke	A	B	C	D	E	F	G
5	48 [1.890]	25 [0.984]	44 [1.732]	16 [0.630]	54 [2.126]	35 [1.378]	35 [1.378]
10	48 [1.890]	25 [0.984]	44 [1.732]	16 [0.630]	54 [2.126]	35 [1.378]	35 [1.378]
15	53 [2.087]	30 [1.181]	49 [1.929]	21 [0.827]	59 [2.323]	40 [1.575]	40 [1.575]

Dimensions of Bore Size ϕ6 [0.236] mm [in.]

●Side-mounted cylinder (left side)

MGAL□6×Stroke-L

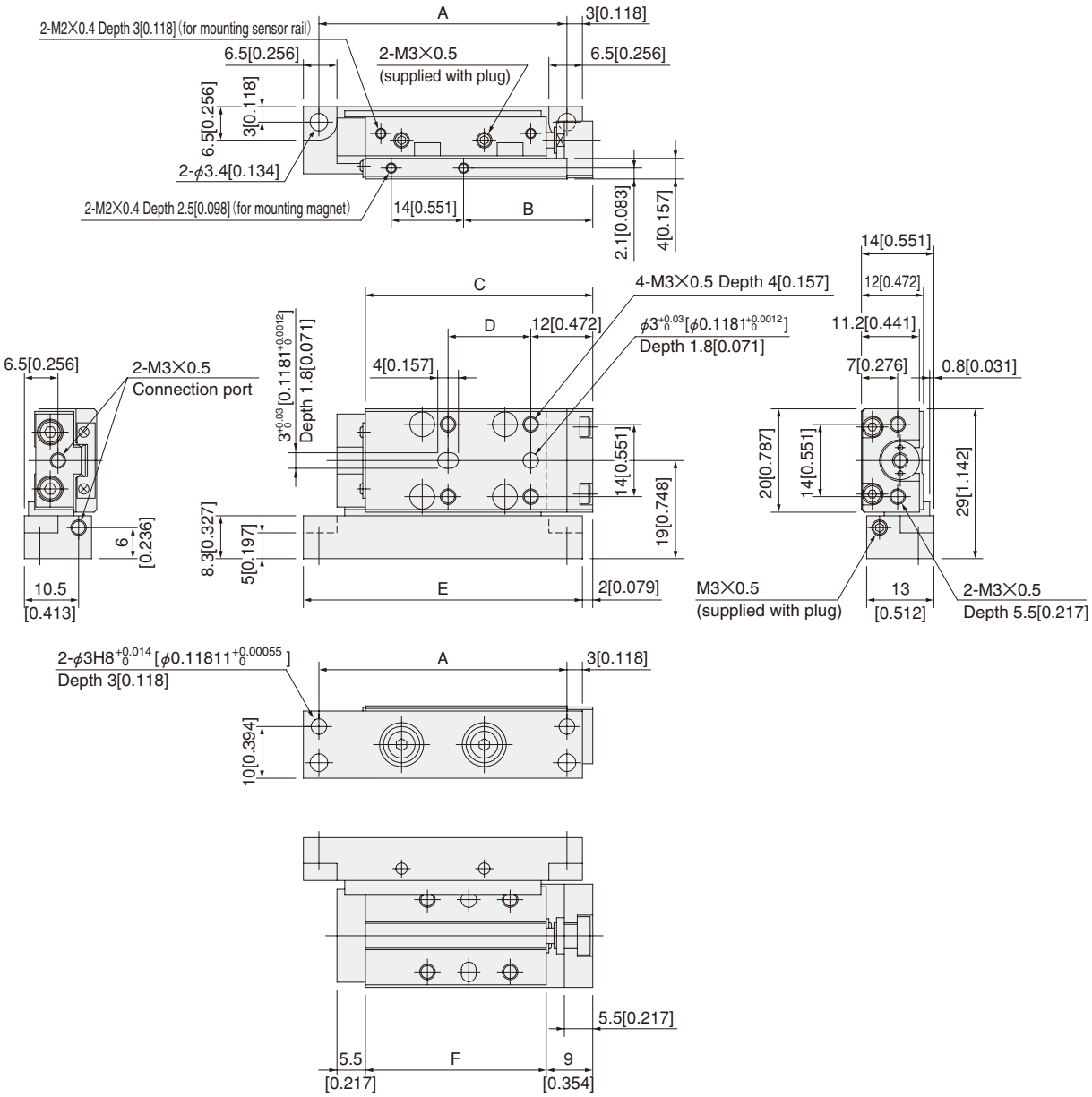

In the case of magnet and sensor rail installed

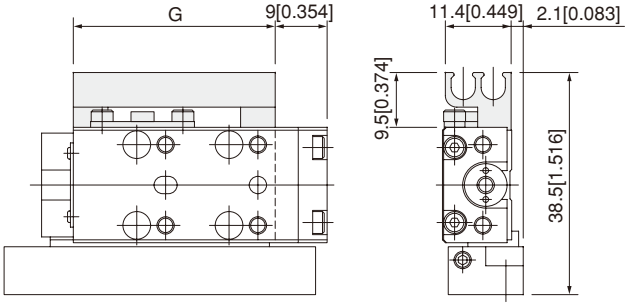

Locating pin: -P (P-MGA1)

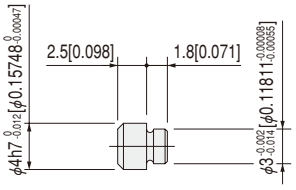

Stroke	A	B	C	D	E	F	G
5	48 [1.890]	25 [0.984]	44 [1.732]	16 [0.630]	54 [2.126]	35 [1.378]	35 [1.378]
10	48 [1.890]	25 [0.984]	44 [1.732]	16 [0.630]	54 [2.126]	35 [1.378]	35 [1.378]
15	53 [2.087]	30 [1.181]	49 [1.929]	21 [0.827]	59 [2.323]	40 [1.575]	40 [1.575]

Dimensions of Bore Size ϕ6 [0.236] mm [in.]

●Side-mounted cylinder with buffer (right side)

MGALG□6×Stroke-R

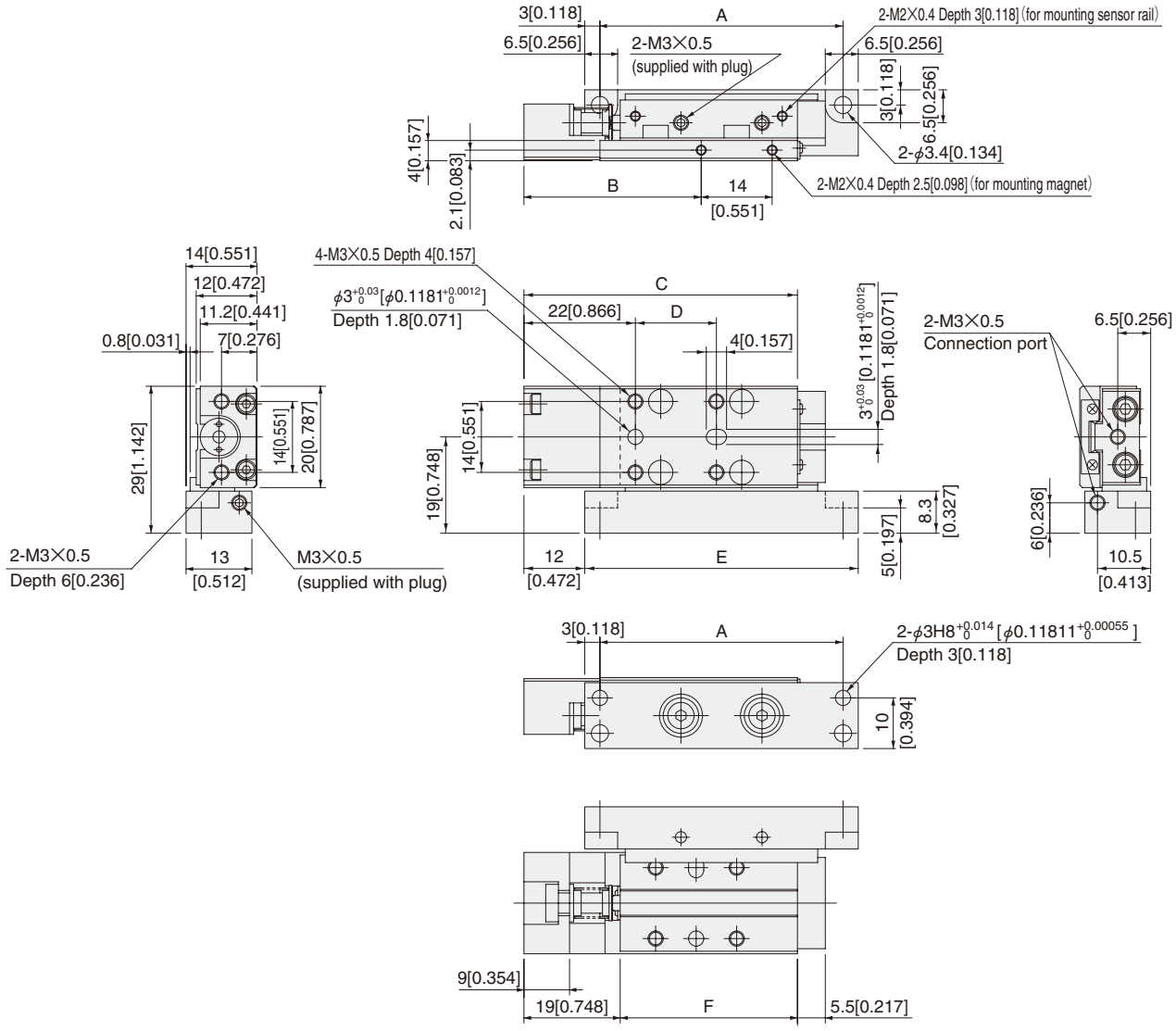

In the case of magnet and sensor rail installed

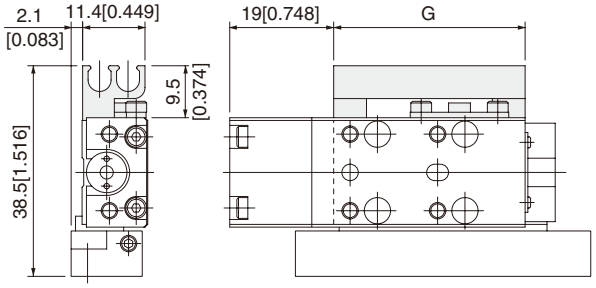

Locating pin: -P (P-MGA1)

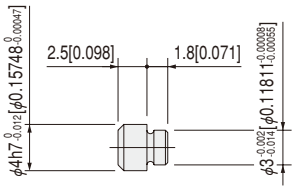

Stroke	A	B	C	D	E	F	G
5	48 [1.890]	35 [1.378]	54 [2.126]	16 [0.630]	54 [2.126]	35 [1.378]	35 [1.378]
10	48 [1.890]	35 [1.378]	54 [2.126]	16 [0.630]	54 [2.126]	35 [1.378]	35 [1.378]
15	53 [2.087]	40 [1.575]	59 [2.323]	21 [0.827]	59 [2.323]	40 [1.575]	40 [1.575]

Remark: The buffer stroke of ϕ6 [0.236] cylinder with buffer is a maximum of 4mm [0.157in.].

Dimensions of Bore Size ϕ6 [0.236] mm [in.]

●Side-mounted cylinder with buffer (left side)

MGALG□6×Stroke-L

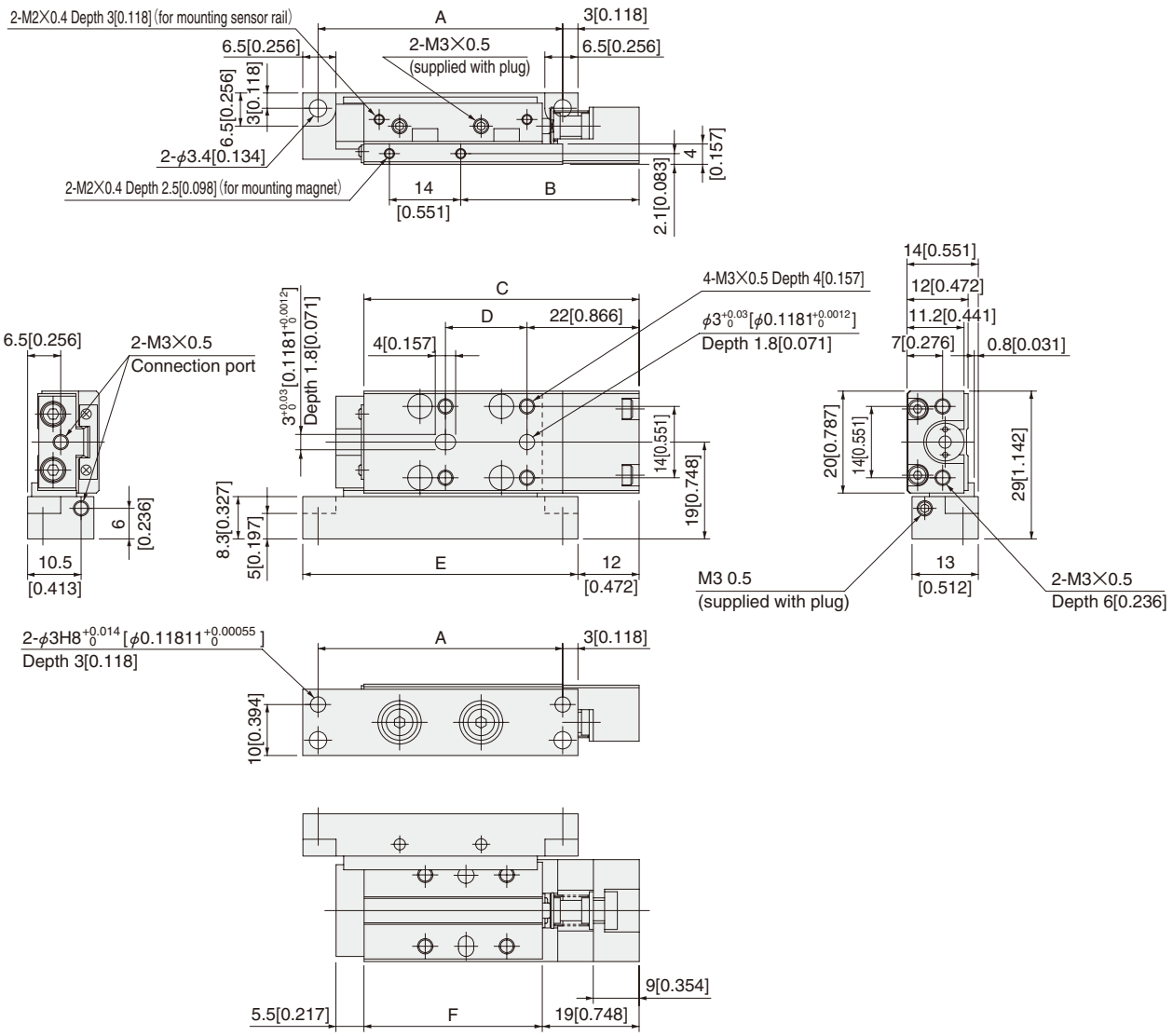

In the case of magnet and sensor rail installed

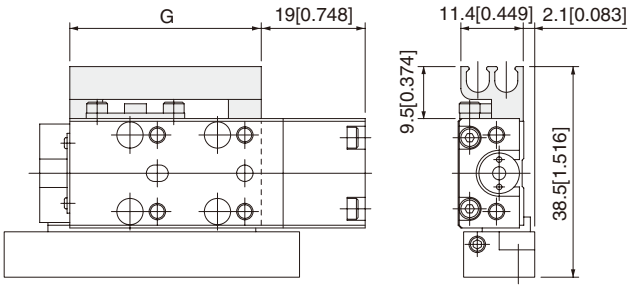

Locating pin: -P (P-MGA1)

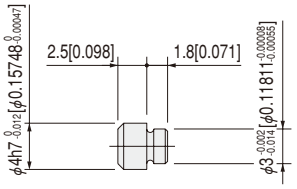

Stroke	A	B	C	D	E	F	G
5	48 [1.890]	35 [1.378]	54 [2.126]	16 [0.630]	54 [2.126]	35 [1.378]	35 [1.378]
10	48 [1.890]	35 [1.378]	54 [2.126]	16 [0.630]	54 [2.126]	35 [1.378]	35 [1.378]
15	53 [2.087]	40 [1.575]	59 [2.323]	21 [0.827]	59 [2.323]	40 [1.575]	40 [1.575]

Remark: The buffer stroke of ϕ6 [0.236] cylinder with buffer is a maximum of 4mm [0.157in.].

Dimensions of Bore Size ϕ8 [0.315] mm [in.]

●Standard cylinder

MGA□8

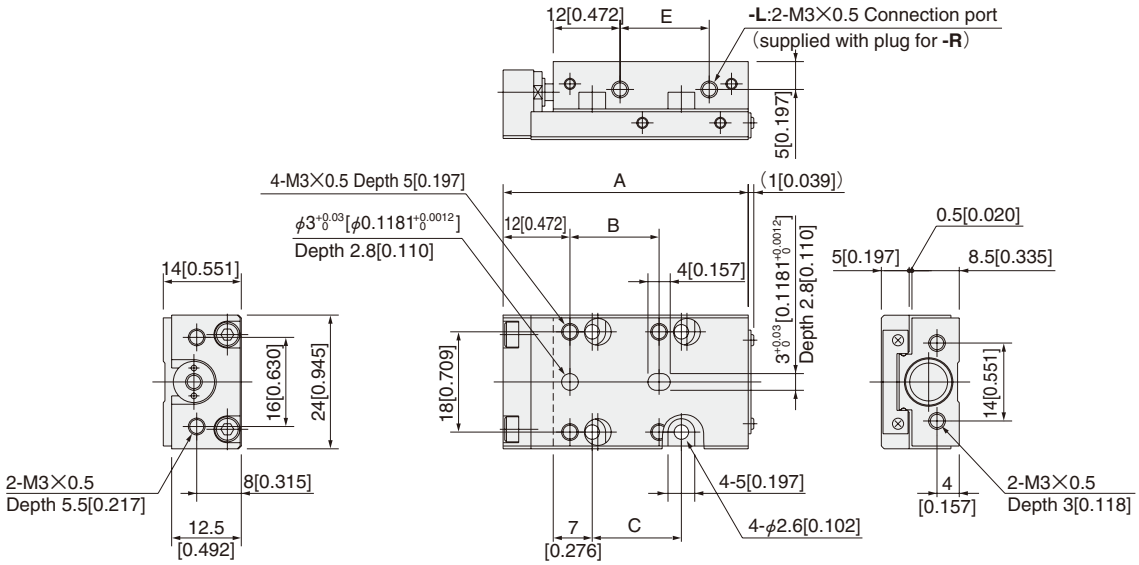

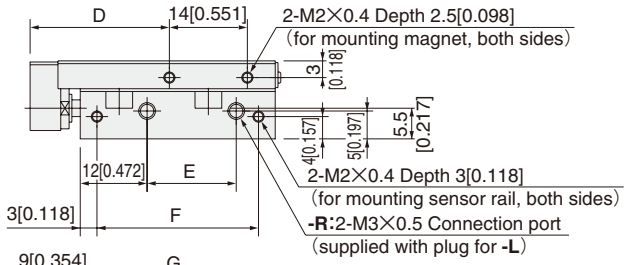

In the case of magnet and sensor rail installed
(Piping direction:-R)

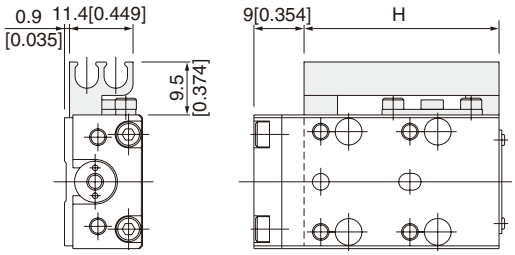

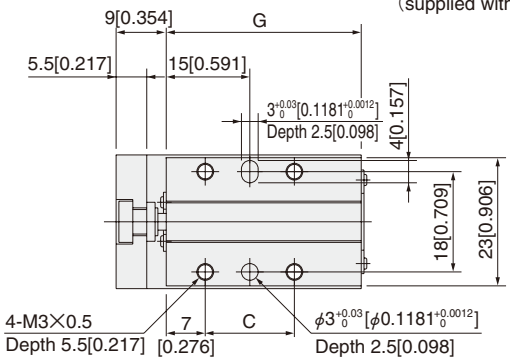

In the case of magnet and sensor rail installed
(Piping direction:-L)

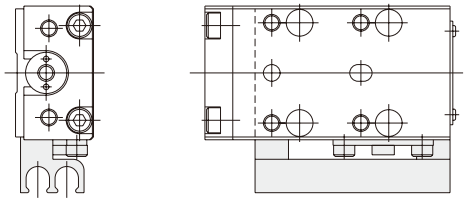

Locating pin: -P (P-MGA1)

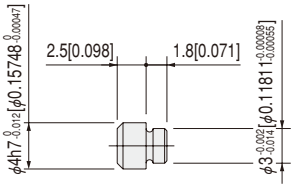

Stroke	A	B	C	D	E	F	G	H
5	44 [1.732]	16 [0.630]	16 [0.630]	25 [0.984]	16 [0.630]	29 [1.142]	35 [1.378]	35 [1.378]
10	44 [1.732]	16 [0.630]	16 [0.630]	25 [0.984]	16 [0.630]	29 [1.142]	35 [1.378]	35 [1.378]
15	54 [2.126]	26 [1.024]	26 [1.024]	35 [1.378]	26 [1.024]	39 [1.535]	45 [1.772]	45 [1.772]
20	54 [2.126]	26 [1.024]	26 [1.024]	35 [1.378]	26 [1.024]	39 [1.535]	45 [1.772]	45 [1.772]

Dimensions of Bore Size ϕ8 [0.315] mm [in.]

●Extended side stroke adjusting cylinder
MGAP□8

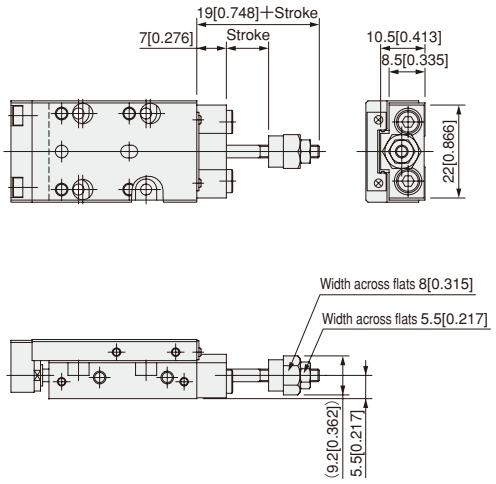

●Extended/retracted-side stroke adjusting cylinder
MGAE□8

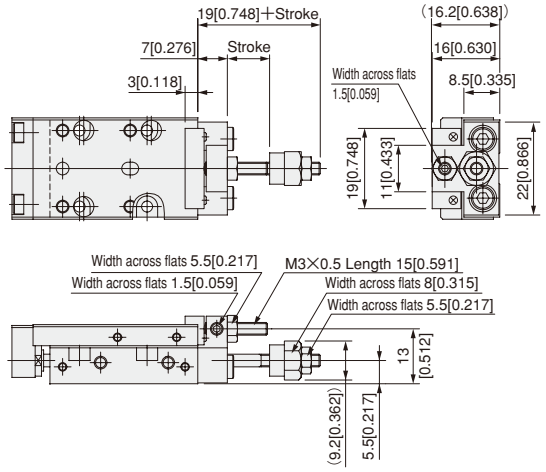

Note: For dimensions not shown in the above, see p.625.

●Cylinder with buffer
MGAG□8

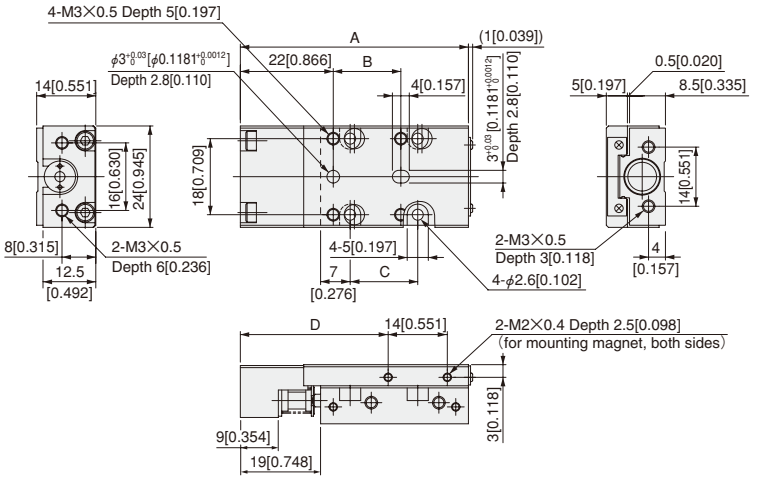

●Extended side stroke adjusting cylinder with buffer
MGAPG□8

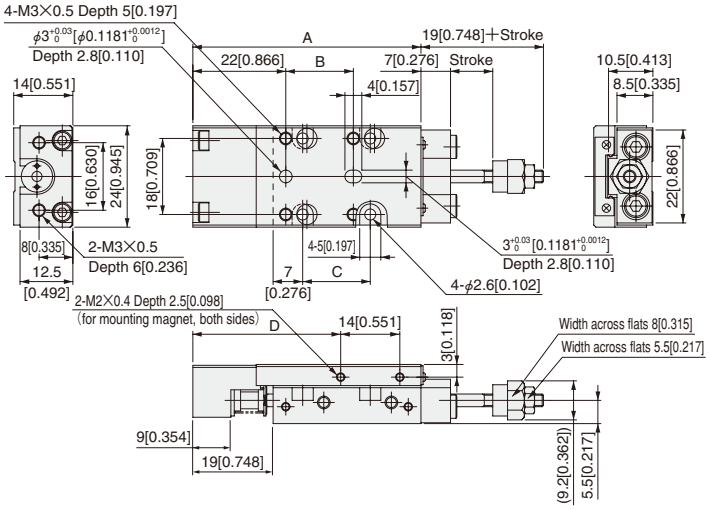

●Extended/retracted-side stroke adjusting cylinder with buffer
MGAEG□8

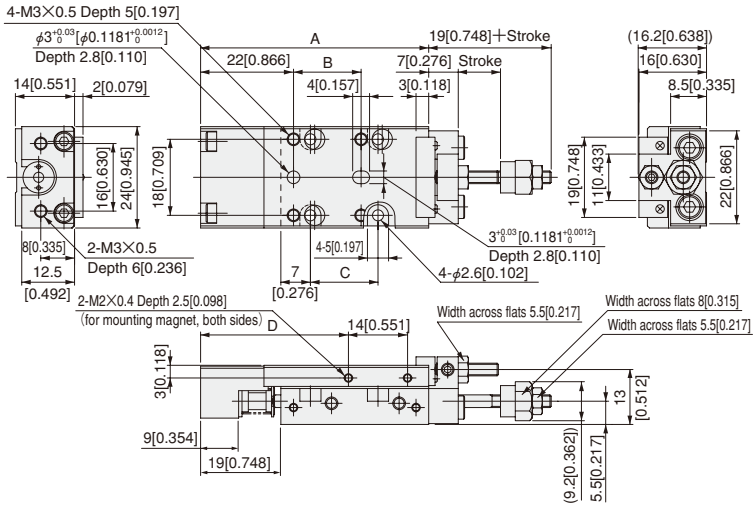

Stroke	A	B	C	D
5	54 [2.126]	16 [0.630]	16 [0.630]	35 [1.378]
10	54 [2.126]	16 [0.630]	16 [0.630]	35 [1.378]
15	64 [2.520]	26 [1.024]	26 [1.024]	45 [1.772]
20	64 [2.520]	26 [1.024]	26 [1.024]	45 [1.772]

Remark: The buffer stroke of ϕ8 [0.315] cylinder with buffer is a maximum of 4mm [0.157in.].

Dimensions of Bore Size ϕ8 [0.315] mm [in.]

●Side-mounted cylinder (right side)

MGAL□8×Stroke-R

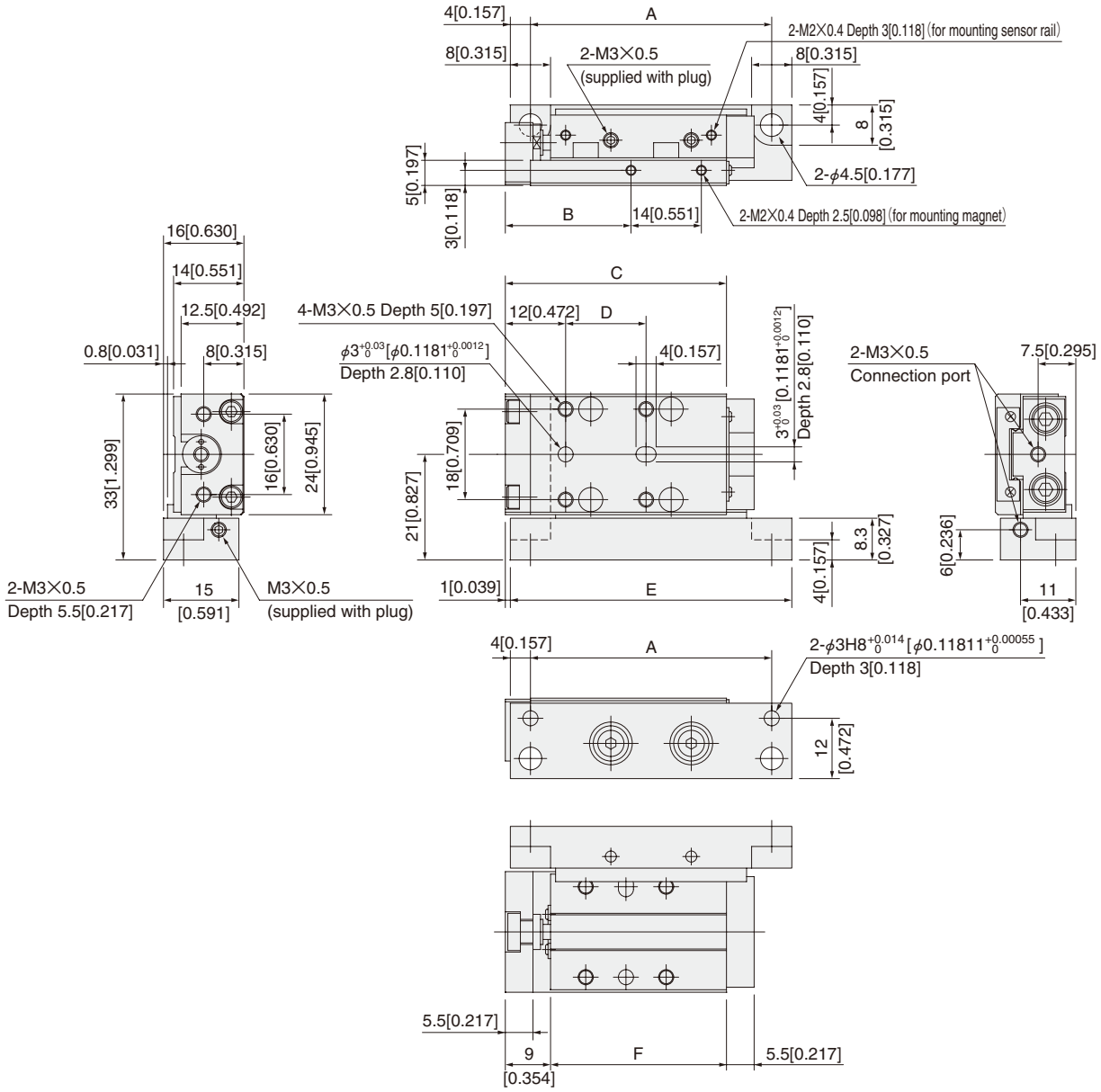

In the case of magnet and sensor rail installed

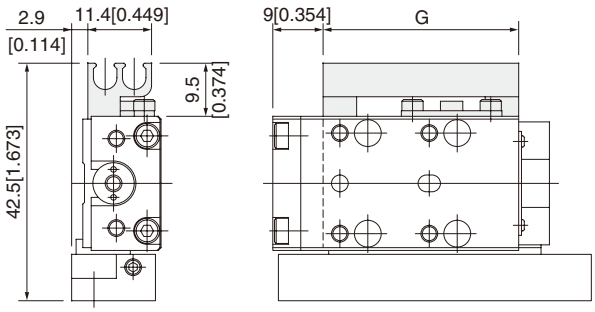

Locating pin: -P (P-MGA1)

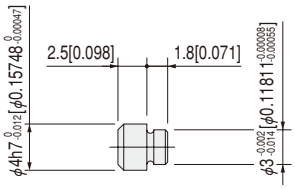

Stroke	A	B	C	D	E	F	G
5	48 [1.890]	25 [0.984]	44 [1.732]	16 [0.630]	56 [2.205]	35 [1.378]	35 [1.378]
10	48 [1.890]	25 [0.984]	44 [1.732]	16 [0.630]	56 [2.205]	35 [1.378]	35 [1.378]
15	58 [2.283]	35 [1.378]	54 [2.126]	26 [1.024]	66 [2.598]	45 [1.772]	45 [1.772]
20	58 [2.283]	35 [1.378]	54 [2.126]	26 [1.024]	66 [2.598]	45 [1.772]	45 [1.772]

Dimensions of Bore Size ϕ8 [0.315] mm [in.]

●Side-mounted cylinder (left side)

MGAL□8×Stroke-L

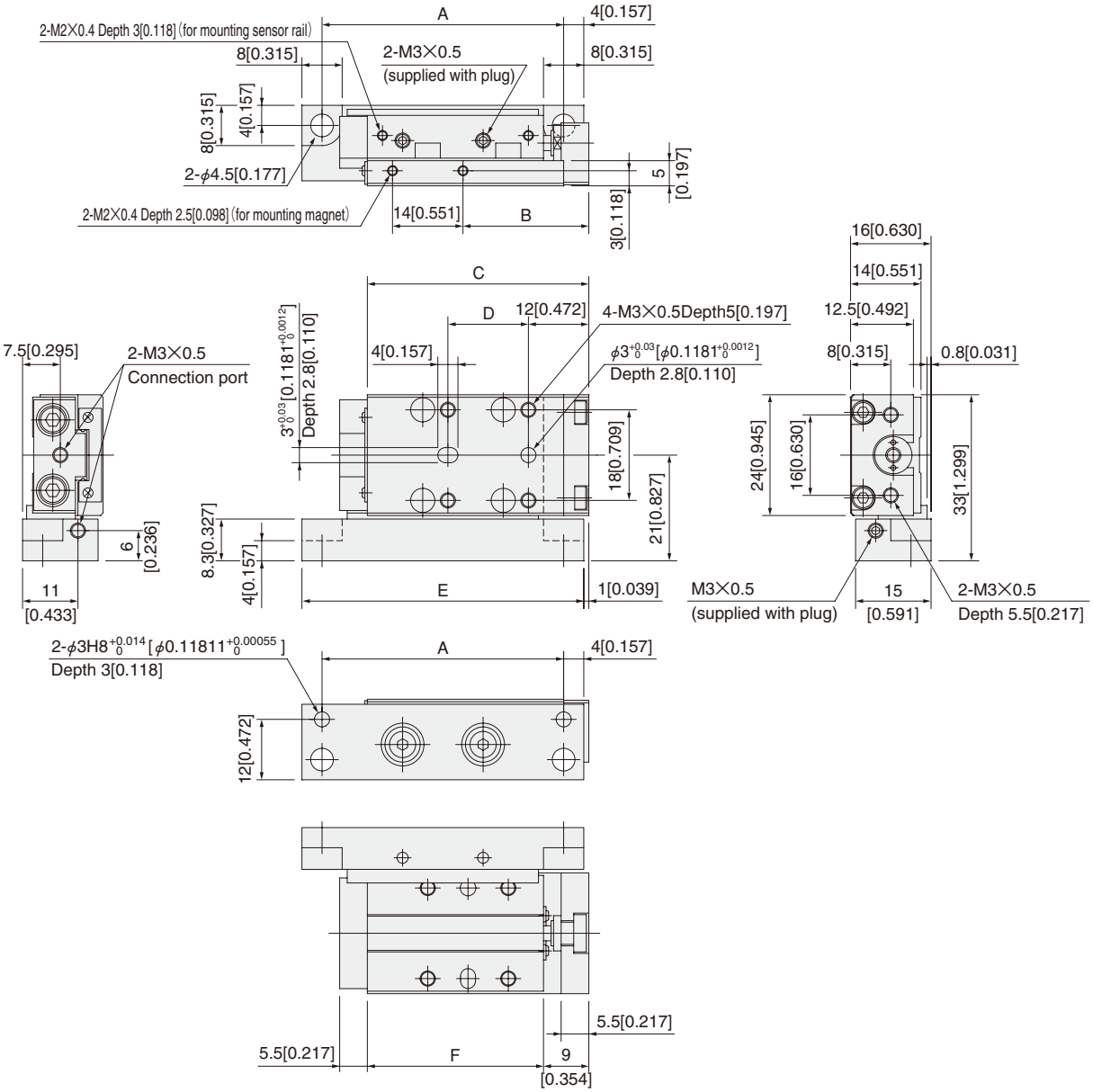

In the case of magnet and sensor rail installed

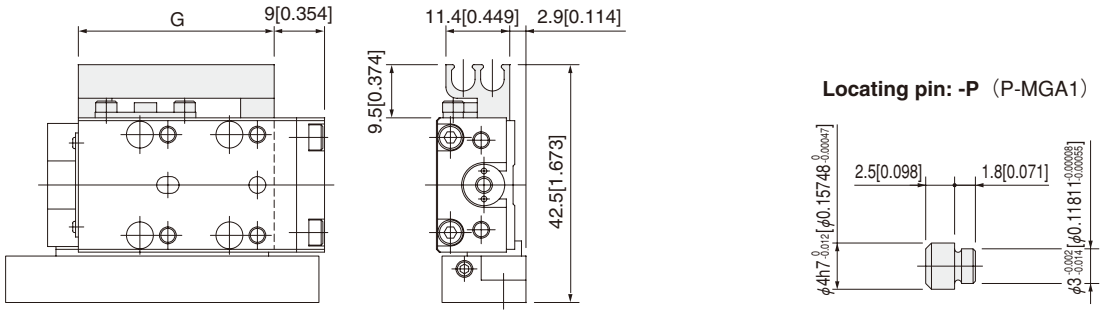

Stroke	A	B	C	D	E	F	G
5	48 [1.890]	25 [0.984]	44 [1.732]	16 [0.630]	56 [2.205]	35 [1.378]	35 [1.378]
10	48 [1.890]	25 [0.984]	44 [1.732]	16 [0.630]	56 [2.205]	35 [1.378]	35 [1.378]
15	58 [2.283]	35 [1.378]	54 [2.126]	26 [1.024]	66 [2.598]	45 [1.772]	45 [1.772]
20	58 [2.283]	35 [1.378]	54 [2.126]	26 [1.024]	66 [2.598]	45 [1.772]	45 [1.772]

Dimensions of Bore Size ϕ8 [0.315] mm [in.]

●Side-mounted cylinder with buffer (right side)

MGALG□8×Stroke-R

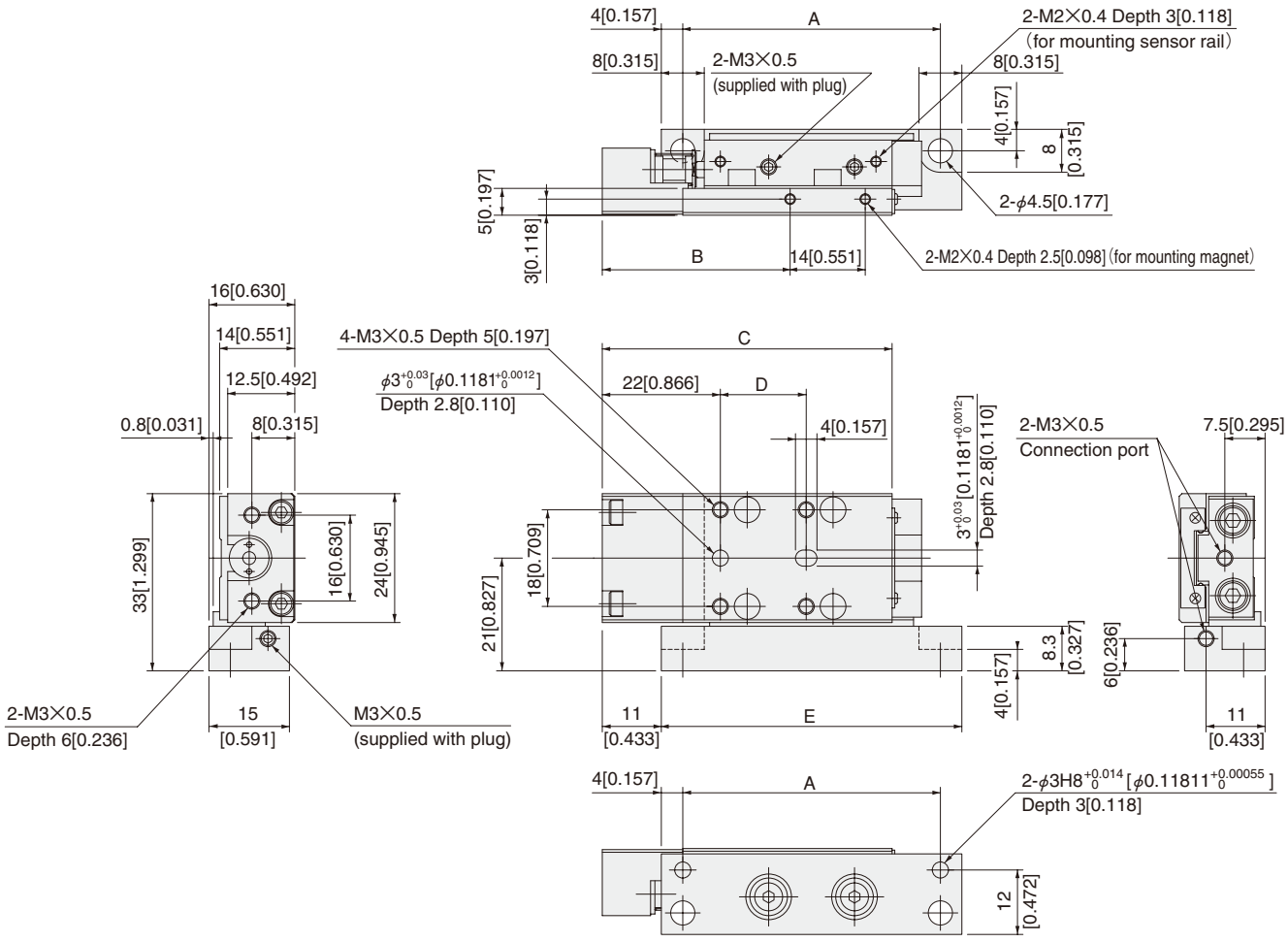

In the case of magnet and sensor rail installed

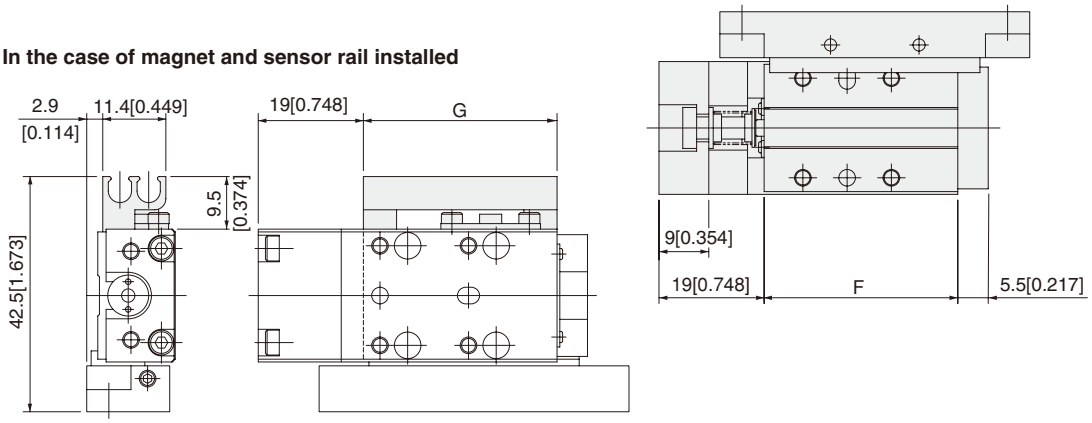

Stroke	A	B	C	D	E	F	G
5	48 [1.890]	35 [1.378]	54 [2.126]	16 [0.630]	56 [2.205]	35 [1.378]	35 [1.378]
10	48 [1.890]	35 [1.378]	54 [2.126]	16 [0.630]	56 [2.205]	35 [1.378]	35 [1.378]
15	58 [2.283]	45 [1.772]	64 [2.520]	26 [1.024]	66 [2.598]	45 [1.772]	45 [1.772]
20	58 [2.283]	45 [1.772]	64 [2.520]	26 [1.024]	66 [2.598]	45 [1.772]	45 [1.772]

Locating pin: -P (P-MGA1)

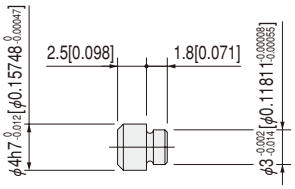

Remark: The buffer stroke of ϕ8 [0.315] cylinder with buffer is a maximum of 4mm [0.157in.].

Dimensions of Bore Size ϕ8[0.315] mm [in.]

●Side-mounted cylinder with buffer (left side)

MGALG□8×Stroke-L

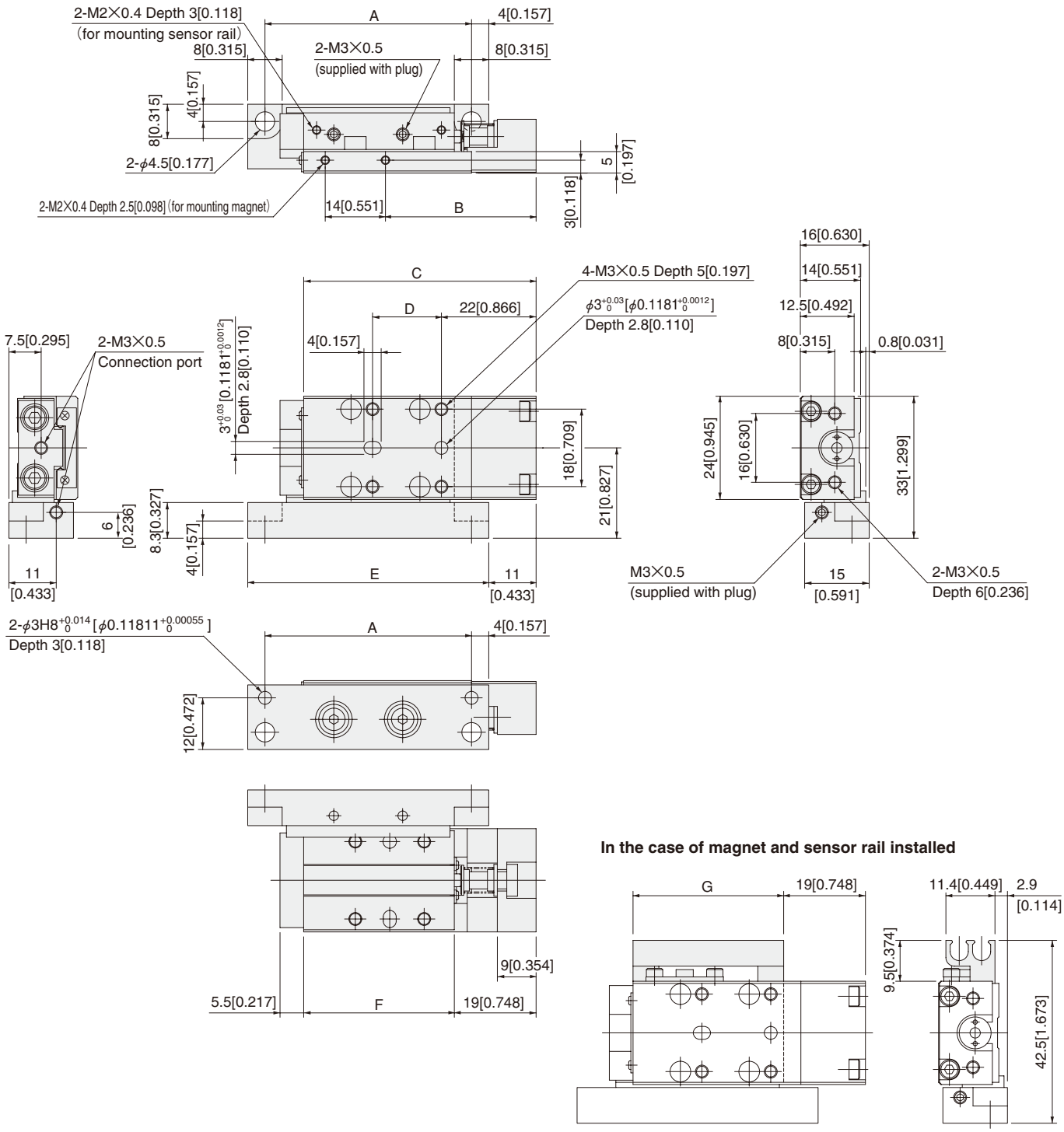

Locating pin: -P (P-MGA1)

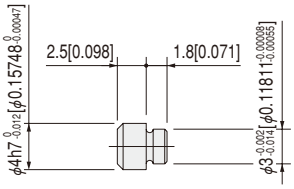

Stroke	A	B	C	D	E	F	G
5	48 [1.890]	35 [1.378]	54 [2.126]	16 [0.630]	56 [2.205]	35 [1.378]	35 [1.378]
10	48 [1.890]	35 [1.378]	54 [2.126]	16 [0.630]	56 [2.205]	35 [1.378]	35 [1.378]
15	58 [2.283]	45 [1.772]	64 [2.520]	26 [1.024]	66 [2.598]	45 [1.772]	45 [1.772]
20	58 [2.283]	45 [1.772]	64 [2.520]	26 [1.024]	66 [2.598]	45 [1.772]	45 [1.772]

Remark : The buffer stroke of ϕ8 [0.315] cylinder with buffer is a maximum of 4mm [0.157in.].

Dimensions of Bore Size ϕ10 [0.394] mm [in.]

●Standard cylinder

MGA□10

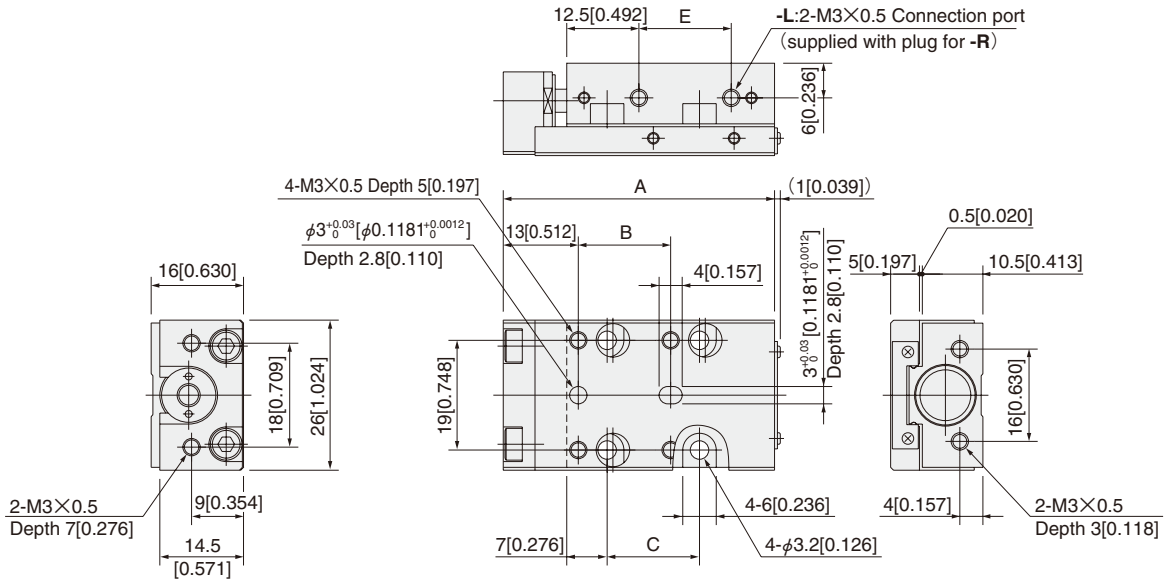

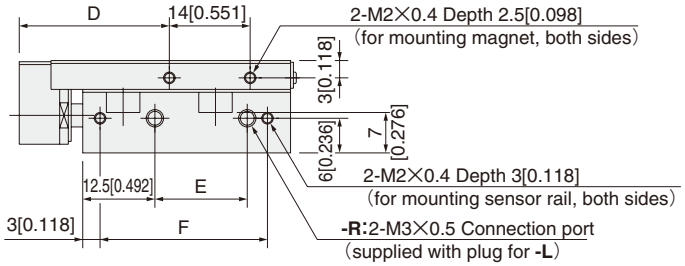

In the case of magnet and sensor rail installed
(Piping direction:-R)

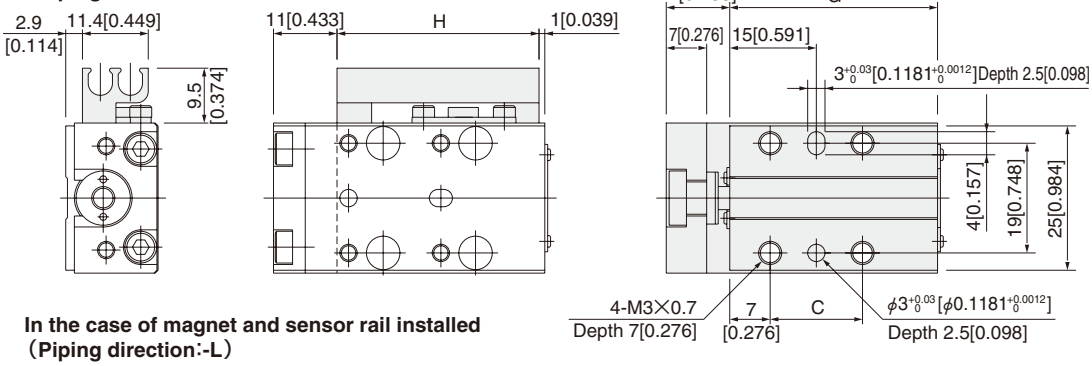

In the case of magnet and sensor rail installed
(Piping direction:-L)

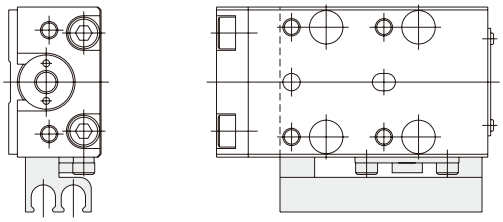

Locating pin: -P (P-MGA1)

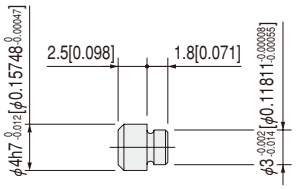

Stroke	A	B	C	D	E	F	G	H
5	47 [1.850]	16 [0.630]	16 [0.630]	26 [1.024]	16 [0.630]	29 [1.142]	36 [1.417]	35 [1.378]
10	47 [1.850]	16 [0.630]	16 [0.630]	26 [1.024]	16 [0.630]	29 [1.142]	36 [1.417]	35 [1.378]
15	57 [2.244]	26 [1.024]	26 [1.024]	36 [1.417]	26 [1.024]	39 [1.535]	46 [1.811]	45 [1.772]
20	57 [2.244]	26 [1.024]	26 [1.024]	36 [1.417]	26 [1.024]	39 [1.535]	46 [1.811]	45 [1.772]
30	67 [2.638]	36 [1.417]	36 [1.417]	46 [1.811]	36 [1.417]	49 [1.929]	56 [2.205]	55 [2.165]

Dimensions of Bore Size ϕ10 [0.394] mm [in.]

●Extended side stroke adjusting cylinder

MGAP□10

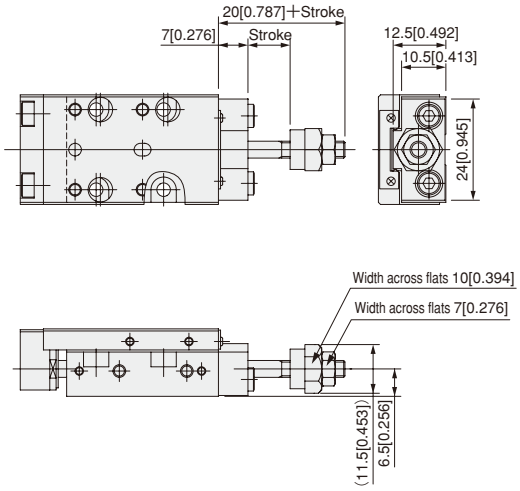

●Extended/retracted-side stroke adjusting cylinder

MGAE□10

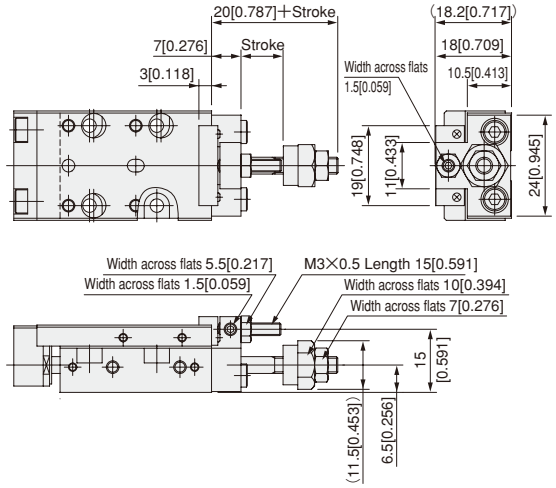

Note: For dimensions not shown in the above, see p.631.

●Cylinder with buffer

MGAG□10

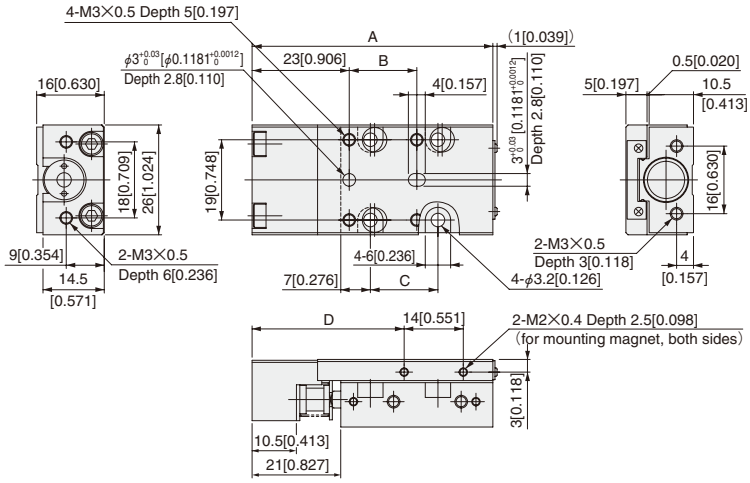

●Extended side stroke adjusting cylinder with buffer

MGAPG□10

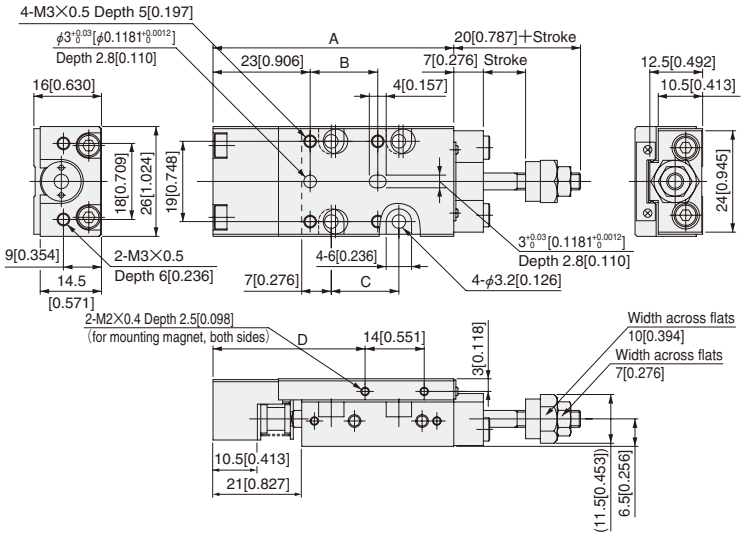

●Extended/retracted-side stroke adjusting cylinder with buffer

MGAEG□10

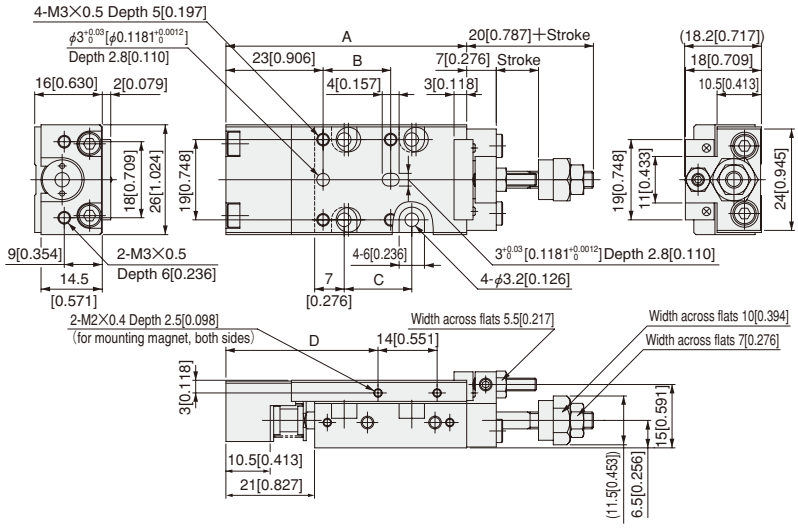

Stroke	A	B	C	D
5	57 [2.244]	16 [0.630]	16 [0.630]	36 [1.417]
10	57 [2.244]	16 [0.630]	16 [0.630]	36 [1.417]
15	67 [2.638]	26 [1.024]	26 [1.024]	46 [1.811]
20	67 [2.638]	26 [1.024]	26 [1.024]	46 [1.811]
30	77 [3.031]	36 [1.417]	36 [1.417]	56 [2.205]

Remark: The buffer stroke of ϕ10 [0.394] cylinder with buffer is a maximum of 4mm [0.157in.].

Dimensions of Bore Size ϕ10 [0.394] mm [in.]

●Side-mounted cylinder (right side)

MGAL□10×Stroke-R

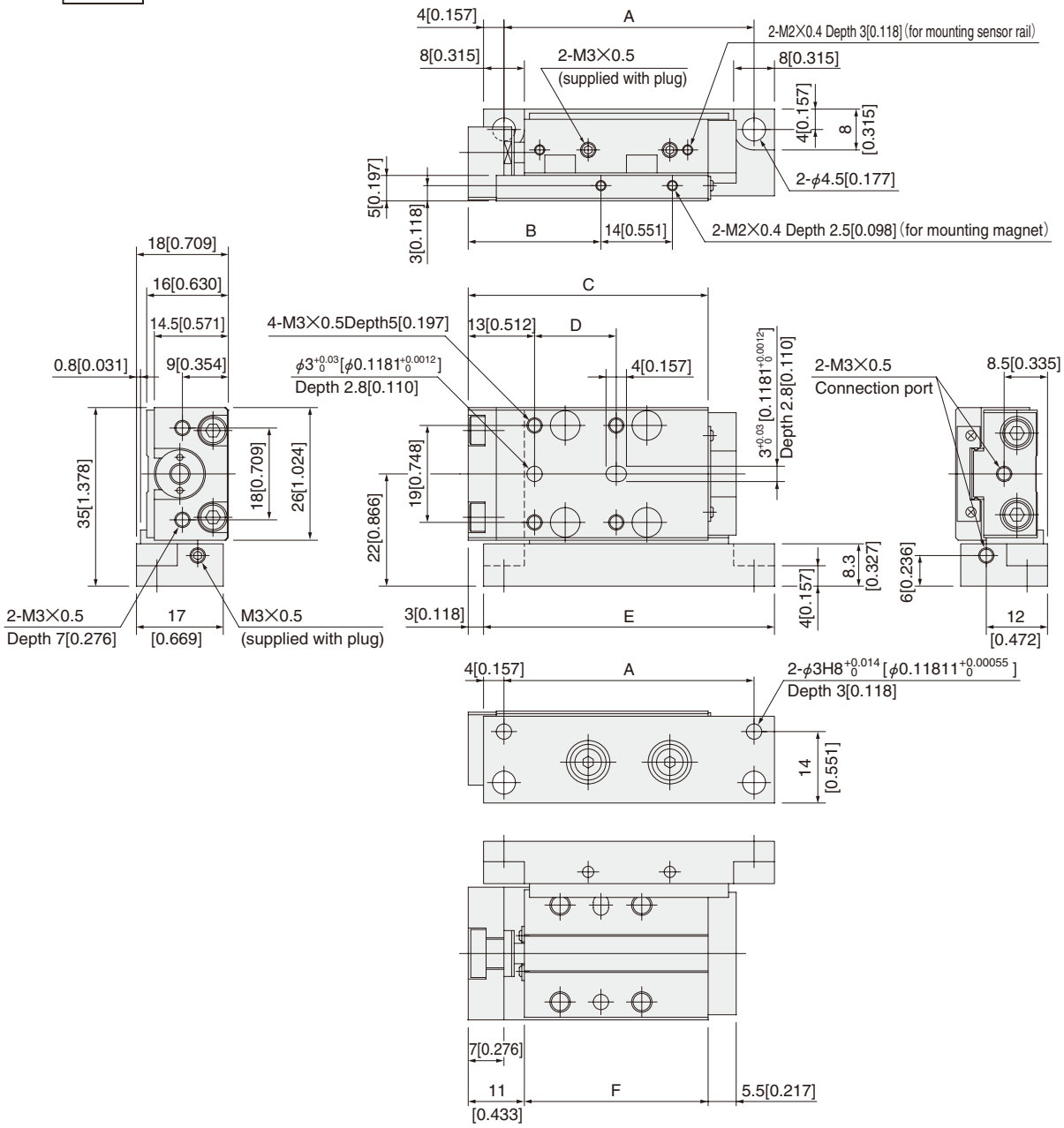

In the case of magnet and sensor rail installed

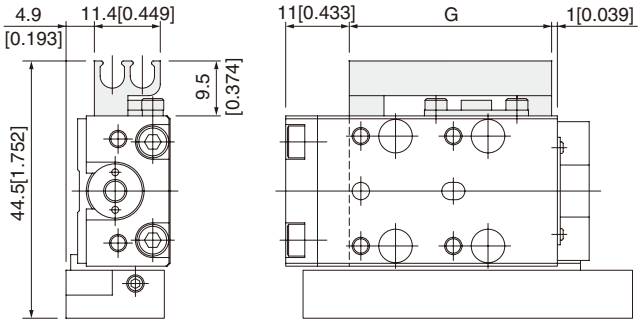

Locating pin: -P (P-MGA1)

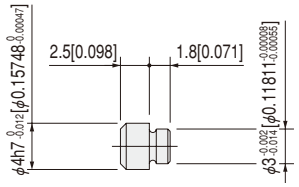

Stroke	A	B	C	D	E	F	G
5	49 [1.929]	26 [1.024]	47 [1.850]	16 [0.630]	57 [2.244]	36 [1.417]	35 [1.378]
10	49 [1.929]	26 [1.024]	47 [1.850]	16 [0.630]	57 [2.244]	36 [1.417]	35 [1.378]
15	59 [2.323]	36 [1.417]	57 [2.244]	26 [1.024]	67 [2.638]	46 [1.811]	45 [1.772]
20	59 [2.323]	36 [1.417]	57 [2.244]	26 [1.024]	67 [2.638]	46 [1.811]	45 [1.772]
30	69 [2.717]	46 [1.811]	67 [2.638]	36 [1.417]	77 [3.031]	56 [2.205]	55 [2.165]

Dimensions of Bore Size ϕ10 [0.394] mm [in.]

●Side-mounted cylinder (left side)

MGAL□10×Stroke-L

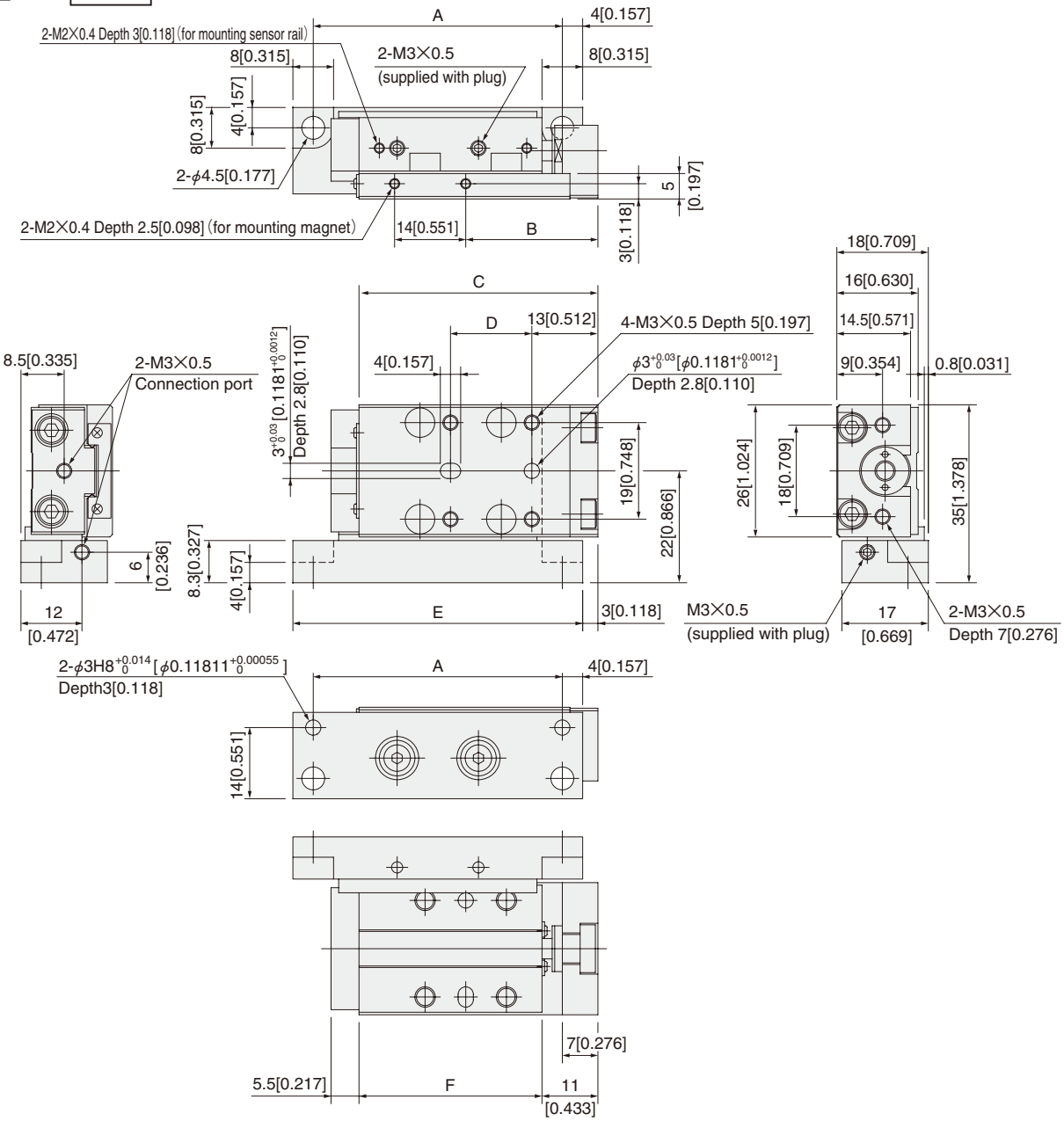

In the case of magnet and sensor rail installed

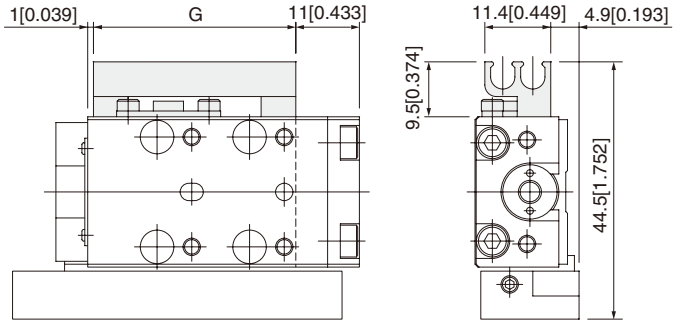

Locating pin: -P (P-MGA1)

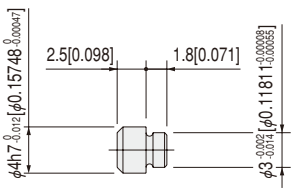

Stroke	A	B	C	D	E	F	G
5	49 [1.929]	26 [1.024]	47 [1.850]	16 [0.630]	57 [2.244]	36 [1.417]	35 [1.378]
10	49 [1.929]	26 [1.024]	47 [1.850]	16 [0.630]	57 [2.244]	36 [1.417]	35 [1.378]
15	59 [2.323]	36 [1.417]	57 [2.244]	26 [1.024]	67 [2.638]	46 [1.811]	45 [1.772]
20	59 [2.323]	36 [1.417]	57 [2.244]	26 [1.024]	67 [2.638]	46 [1.811]	45 [1.772]
30	69 [2.717]	46 [1.811]	67 [2.638]	36 [1.417]	77 [3.031]	56 [2.205]	55 [2.165]

Dimensions of Bore Size ϕ10 [0.394] mm [in.]

●Side-mounted cylinder with buffer (right side)

MGALG□10× Stroke -R

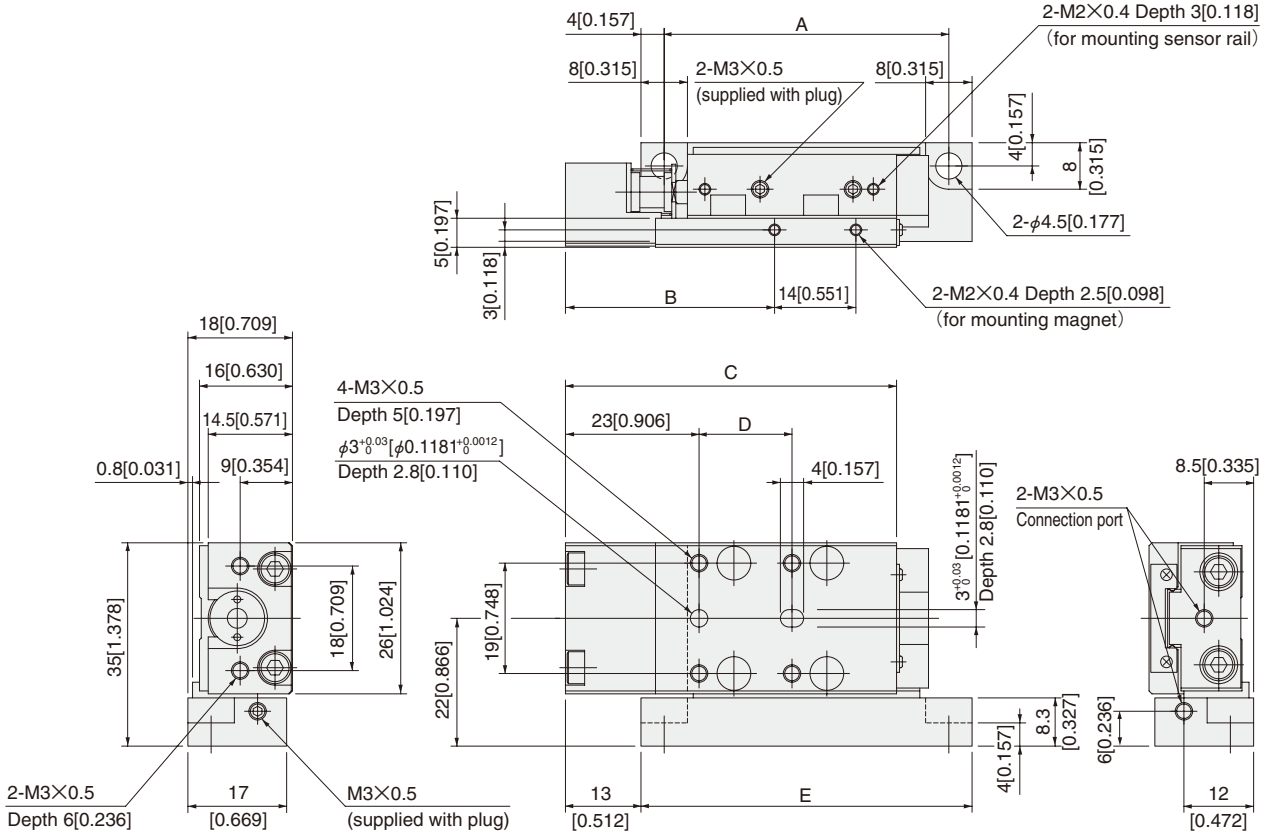

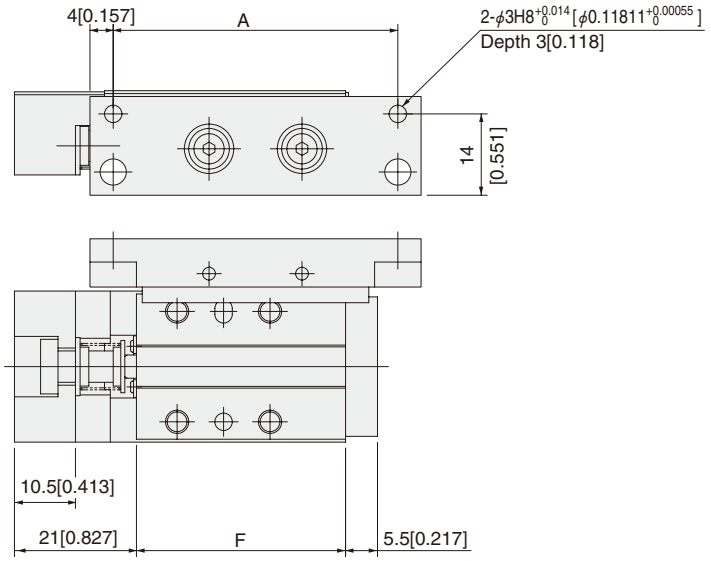

In the case of magnet and sensor rail installed

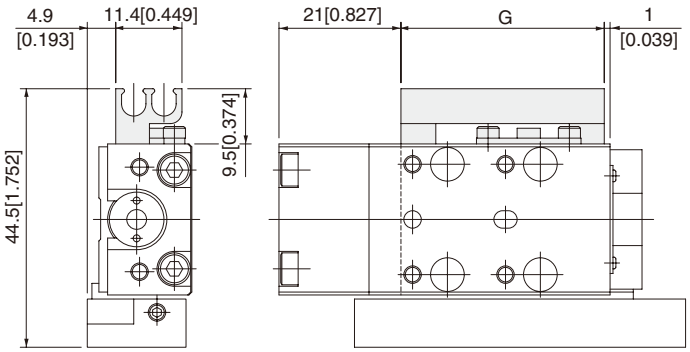

Locating pin: -P (P-MGA1)

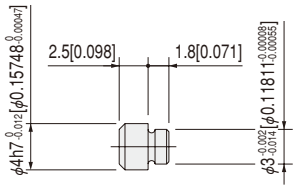

Stroke	A	B	C	D	E	F	G
5	49 [1.929]	36 [1.417]	57 [2.244]	16 [0.630]	57 [2.244]	36 [1.417]	35 [1.378]
10	49 [1.929]	36 [1.417]	57 [2.244]	16 [0.630]	57 [2.244]	36 [1.417]	35 [1.378]
15	59 [2.323]	46 [1.811]	67 [2.638]	26 [1.024]	67 [2.638]	46 [1.811]	45 [1.772]
20	59 [2.323]	46 [1.811]	67 [2.638]	26 [1.024]	67 [2.638]	46 [1.811]	45 [1.772]
30	69 [2.717]	56 [2.205]	77 [3.031]	36 [1.417]	77 [3.031]	56 [2.205]	55 [2.165]

Remark: The buffer stroke of ϕ10 [0.394] cylinder with buffer is a maximum of 4mm [0.157in.].

Dimensions of Bore Size ϕ10 [0.394] mm [in.]

●Side-mounted cylinder with buffer (left side)

MGALG□10× Stroke -L

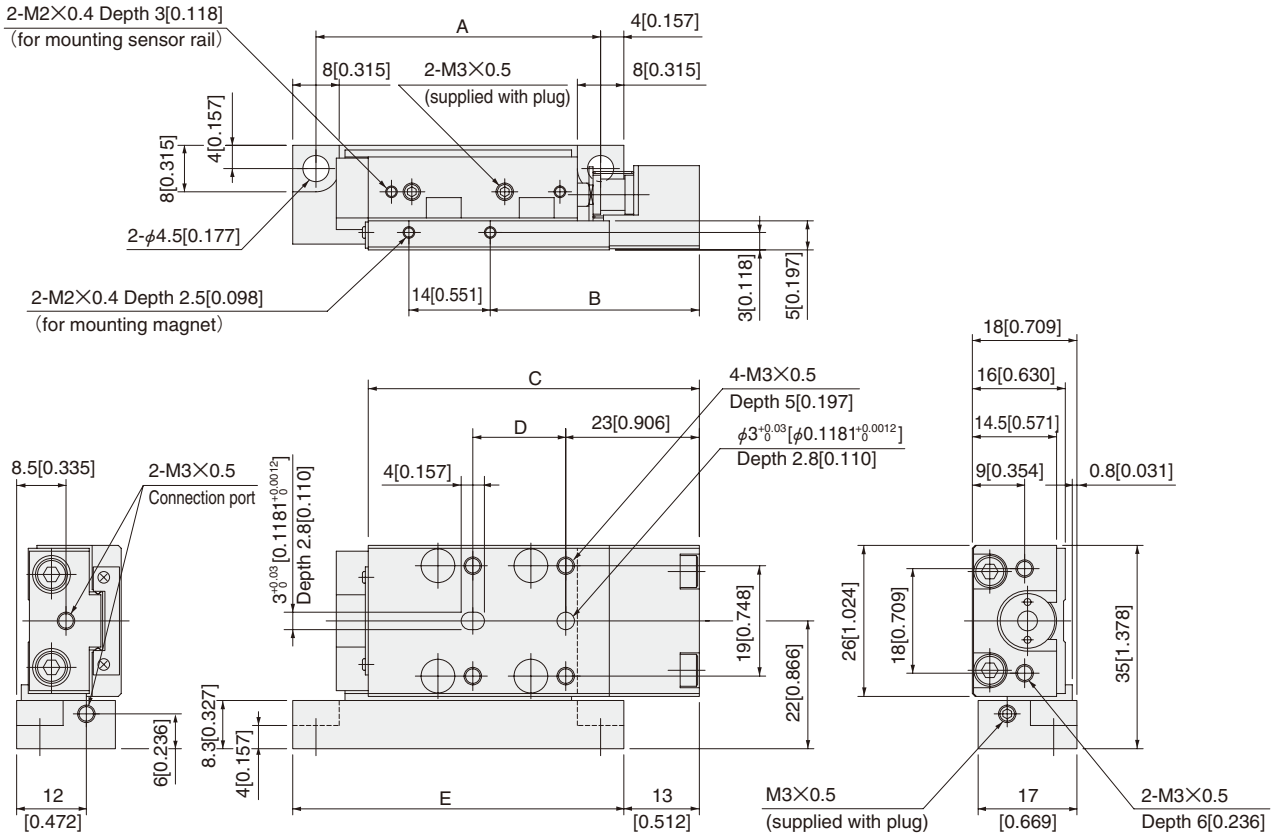

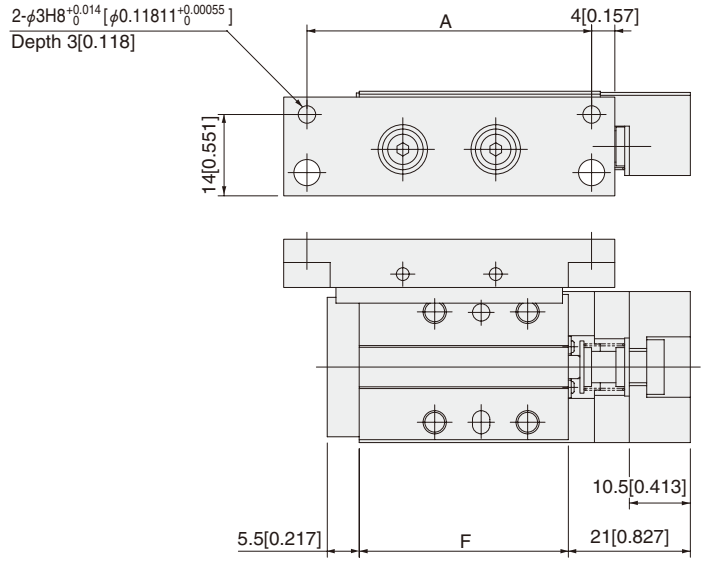

In the case of magnet and sensor rail installed

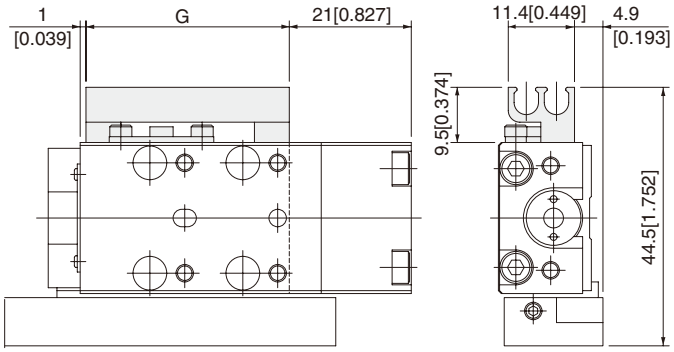

Locating pin: -P (P-MGA1)

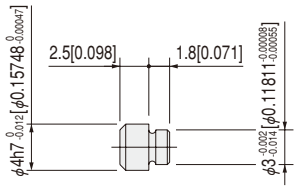

Stroke	A	B	C	D	E	F	G
5	49 [1.929]	36 [1.417]	57 [2.244]	16 [0.630]	57 [2.244]	36 [1.417]	35 [1.378]
10	49 [1.929]	36 [1.417]	57 [2.244]	16 [0.630]	57 [2.244]	36 [1.417]	35 [1.378]
15	59 [2.323]	46 [1.811]	67 [2.638]	26 [1.024]	67 [2.638]	46 [1.811]	45 [1.772]
20	59 [2.323]	46 [1.811]	67 [2.638]	26 [1.024]	67 [2.638]	46 [1.811]	45 [1.772]
30	69 [2.717]	56 [2.205]	77 [3.031]	36 [1.417]	77 [3.031]	56 [2.205]	55 [2.165]

Remark: The buffer stroke of ϕ10 [0.394] cylinder with buffer is a maximum of 4mm [0.157in.].

Dimensions of Bore Size ϕ 12 [0.472] mm [in.]

●Standard cylinder

Remark: For cylinder with magnet sensor rail, see p.638.

MGA12

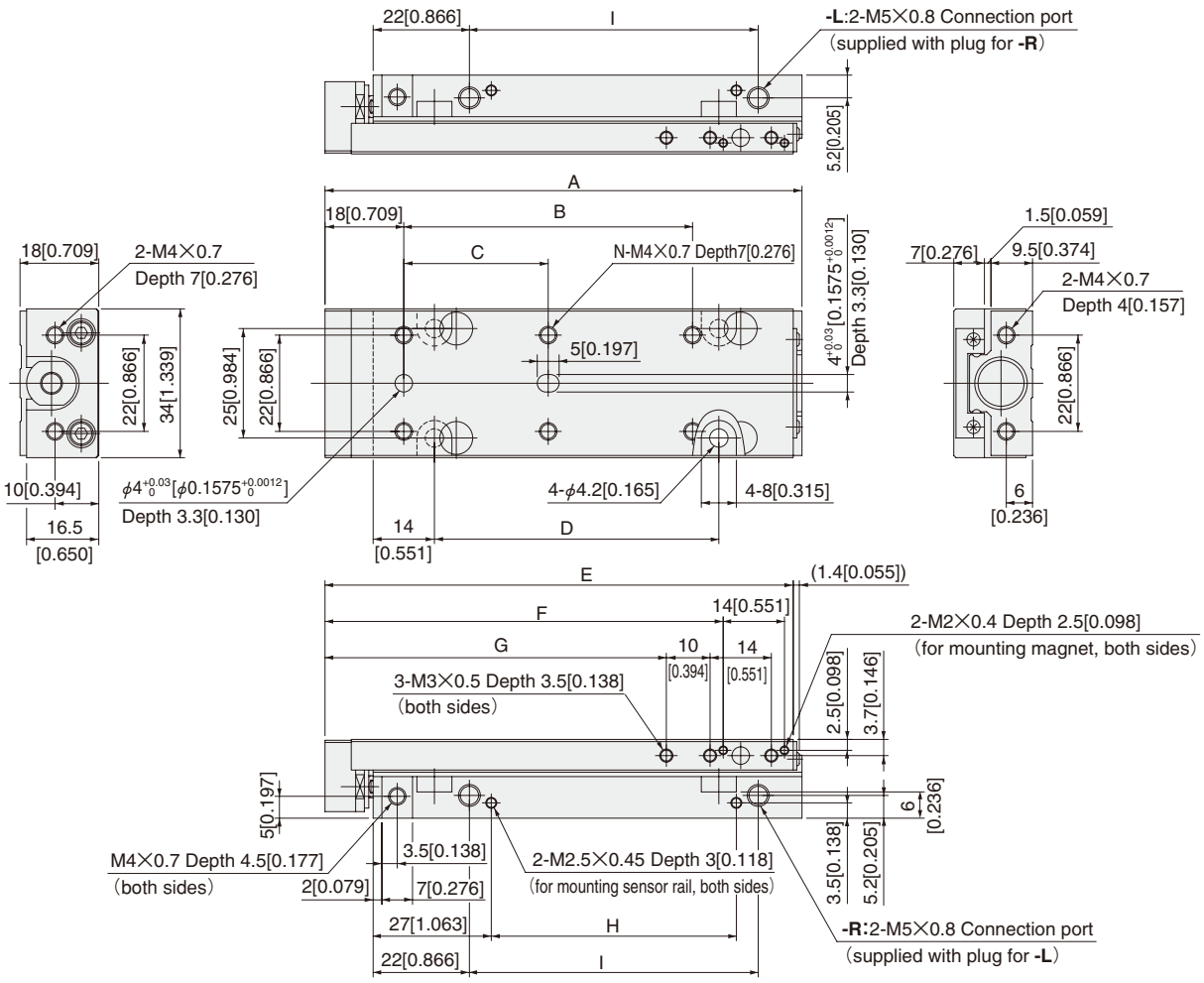

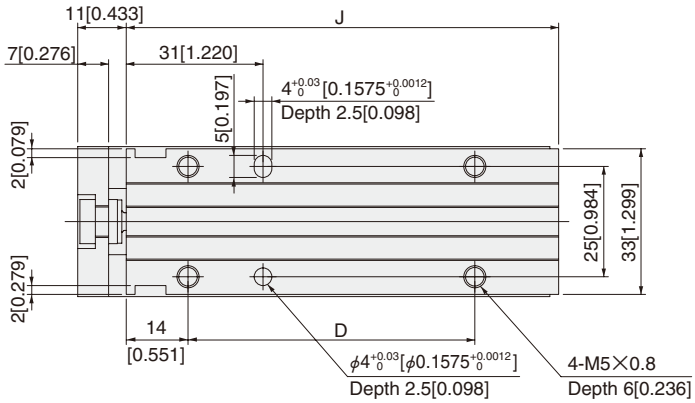

Locating pin: -P (P-MGA2)

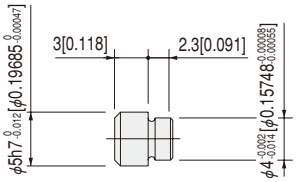

Stroke	A	B	C	D	E	F	G	H	I	J	K	N
10	69 [2.717]	—	26 [1.024]	25 [0.984]	67 [2.638]	51 [2.008]	38 [1.496]	16 [0.630]	26 [1.024]	58 [2.283]	46 [1.811]	4
20	69 [2.717]	—	26 [1.024]	25 [0.984]	67 [2.638]	51 [2.008]	38 [1.496]	16 [0.630]	26 [1.024]	58 [2.283]	46 [1.811]	4
30	89 [3.504]	—	46 [1.811]	45 [1.772]	87 [3.425]	71 [2.795]	58 [2.283]	36 [1.417]	46 [1.811]	78 [3.071]	66 [2.598]	4
40	89 [3.504]	—	46 [1.811]	45 [1.772]	87 [3.425]	71 [2.795]	58 [2.283]	36 [1.417]	46 [1.811]	78 [3.071]	66 [2.598]	4
50	109 [4.291]	66 [2.598]	33 [1.299]	65 [2.559]	107 [4.213]	91 [3.583]	78 [3.071]	56 [2.205]	66 [2.598]	98 [3.858]	86 [3.386]	6
60	109 [4.291]	66 [2.598]	33 [1.299]	65 [2.559]	107 [4.213]	91 [3.583]	78 [3.071]	56 [2.205]	66 [2.598]	98 [3.858]	86 [3.386]	6

Dimensions of Bore Size ϕ12 [0.472] mm [in.]

●**Cylinder with magnet sensor rail MGAS12**

●**Cylinder with shock absorber MGA□12-SS□**

Piping direction: -R

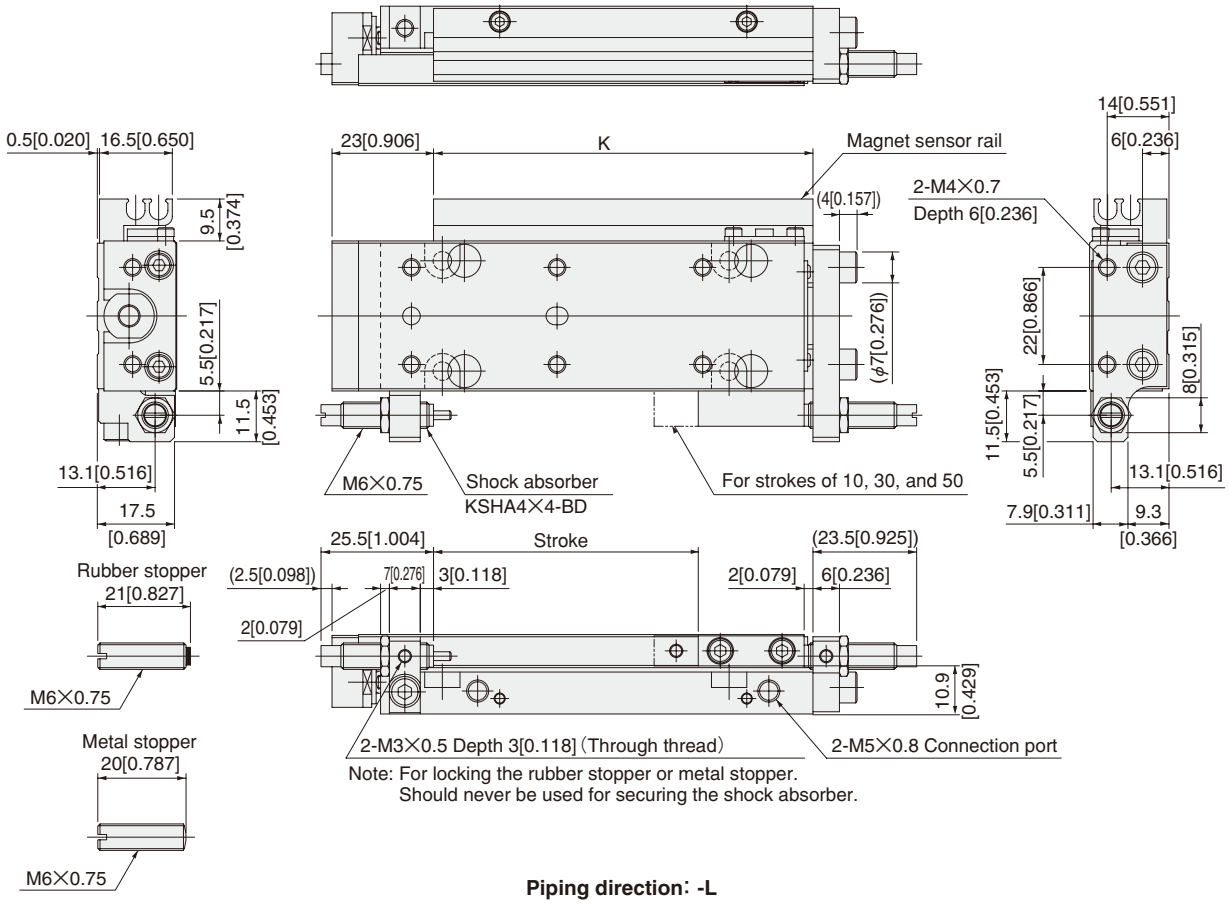

Note: For locking the rubber stopper or metal stopper.
Should never be used for securing the shock absorber.

Piping direction: -L

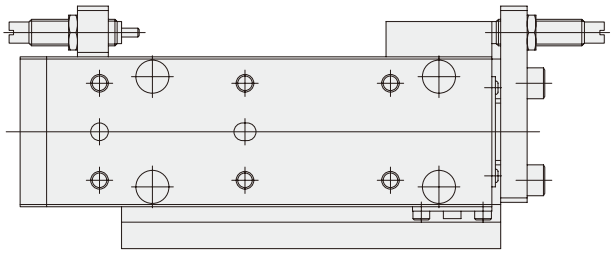

Locating pin: -P (P-MGA2)

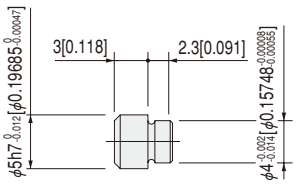

Dimensions of Bore Size ϕ 12 [0.472] mm [in.]

●Cylinder with buffer

Remark: For cylinder with magnet sensor rail, see p.640.

MGAG12

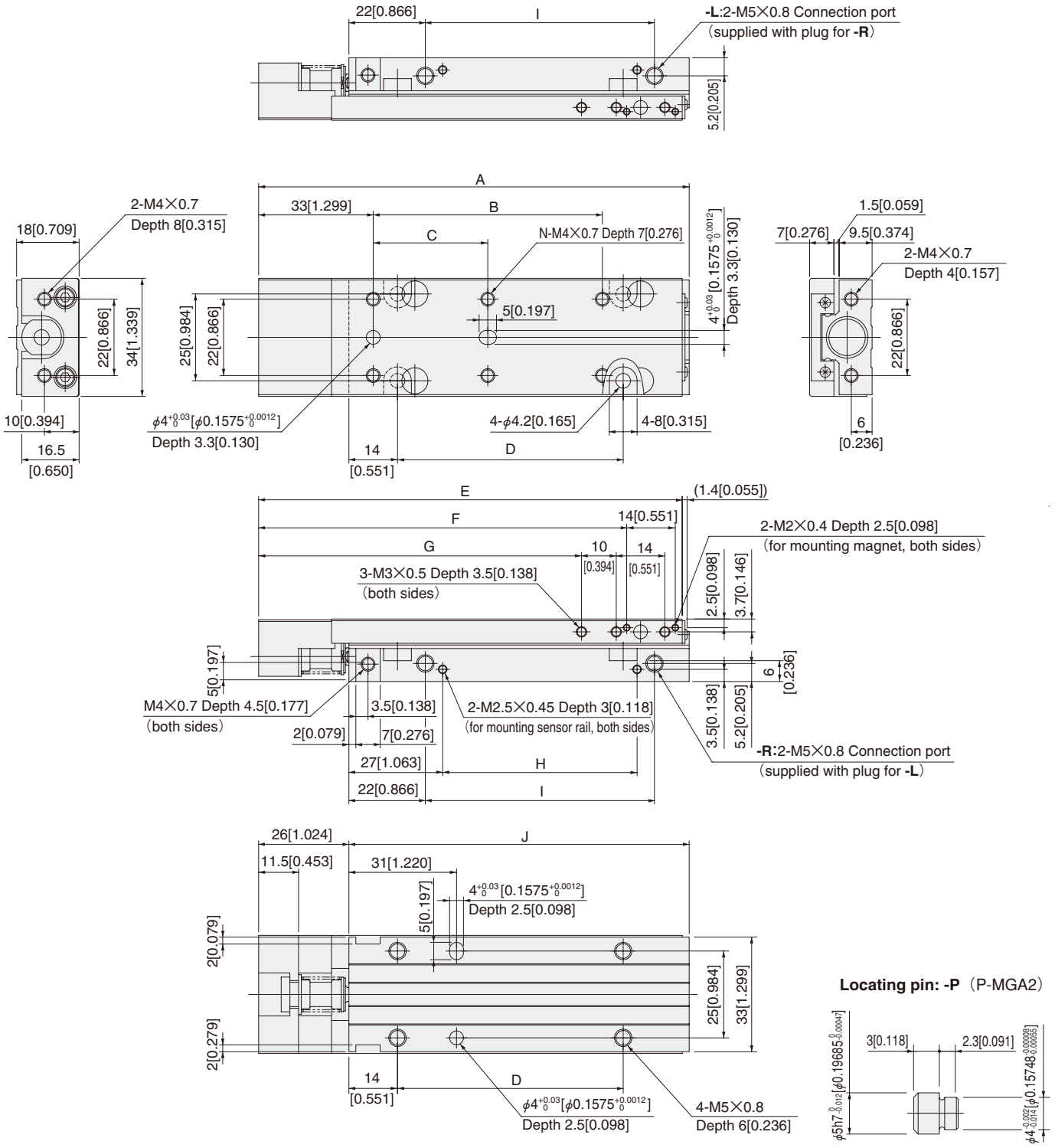

Stroke	A	B	C	D	E	F	G	H	I	J	K	N
10	84 [3.307]	—	26 [1.024]	25 [0.984]	82 [3.228]	66 [2.598]	53 [2.087]	16 [0.630]	26 [1.024]	58 [2.283]	46 [1.811]	4
20	84 [3.307]	—	26 [1.024]	25 [0.984]	82 [3.228]	66 [2.598]	53 [2.087]	16 [0.630]	26 [1.024]	58 [2.283]	46 [1.811]	4
30	104 [4.094]	—	46 [1.811]	45 [1.772]	102 [4.016]	86 [3.386]	73 [2.874]	36 [1.417]	46 [1.811]	78 [3.071]	66 [2.598]	4
40	104 [4.094]	—	46 [1.811]	45 [1.772]	102 [4.016]	86 [3.386]	73 [2.874]	36 [1.417]	46 [1.811]	78 [3.071]	66 [2.598]	4
50	124 [4.882]	66 [2.598]	33 [1.299]	65 [2.559]	122 [4.803]	106 [4.173]	93 [3.661]	56 [2.205]	66 [2.598]	98 [3.858]	86 [3.386]	6
60	124 [4.882]	66 [2.598]	33 [1.299]	65 [2.559]	122 [4.803]	106 [4.173]	93 [3.661]	56 [2.205]	66 [2.598]	98 [3.858]	86 [3.386]	6

Remark: The buffer stroke of ϕ 12 [0.472] cylinder with buffer is a maximum of 6mm [0.236in.].

Dimensions of Bore Size ϕ12 [0.472] mm [in.]

●Cylinder with buffer and magnet sensor rail MGAGS12
●Cylinder with buffer and shock absorber MGAG□12-SSR

Piping direction: -R

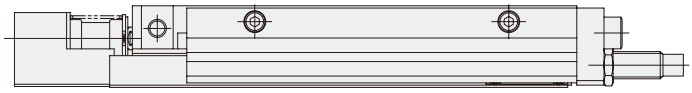

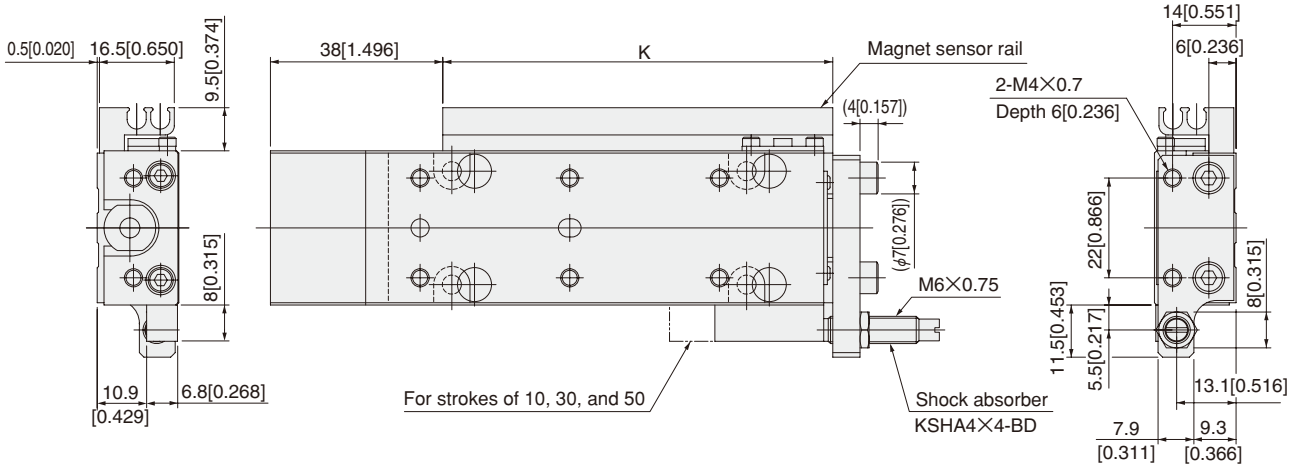

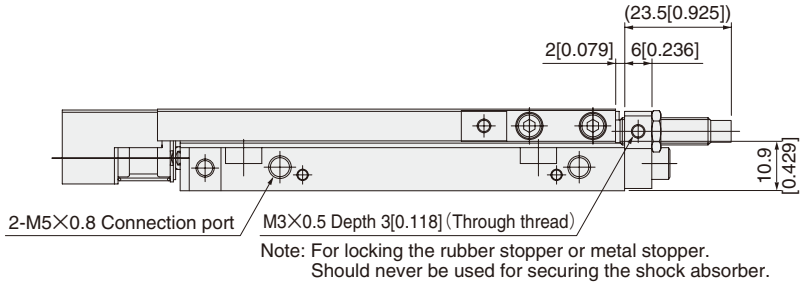

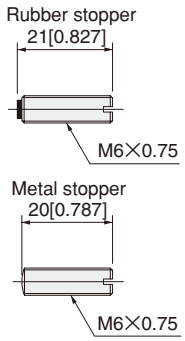

Piping direction: -L

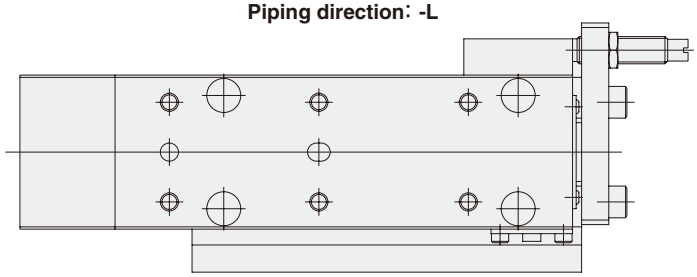

Locating pin: -P (P-MGA2)

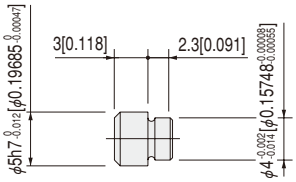

Remark: The buffer stroke of ϕ12 [0.472] cylinder with buffer is a maximum of 6mm [0.236in.].

Dimensions of Bore Size ϕ 12 [0.472] mm [in.]

●Cylinder with end keep

Remark: For cylinder with magnet sensor rail, see p.642.

MGAK12

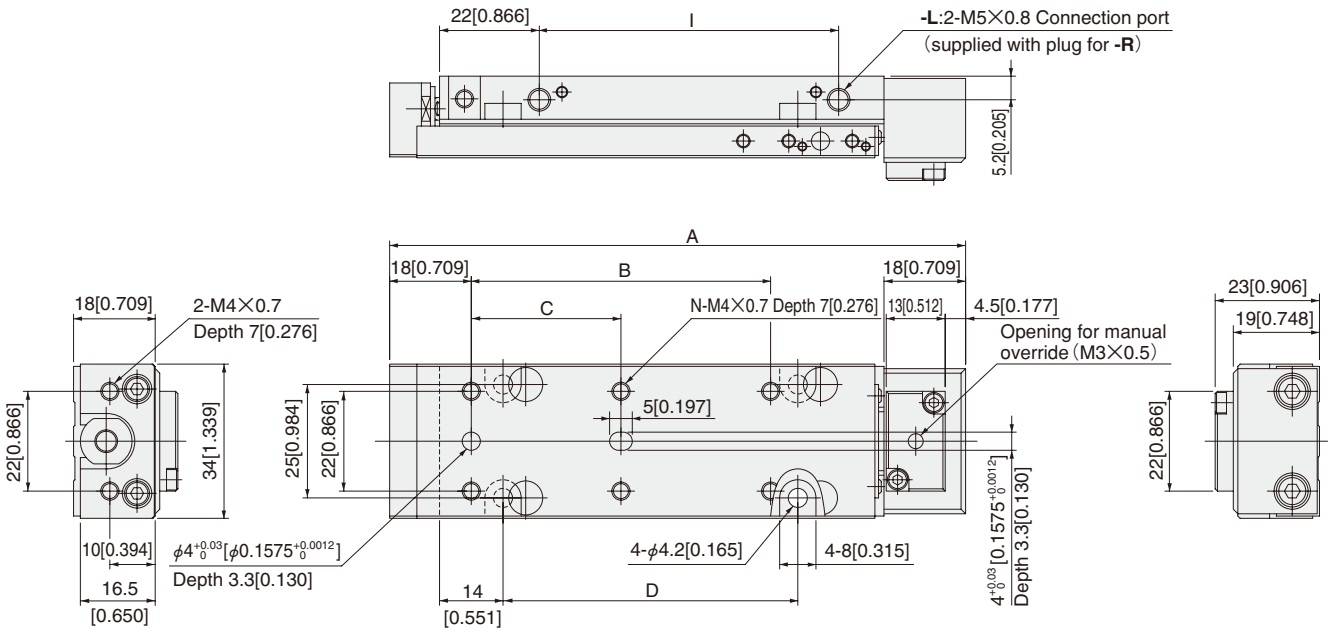

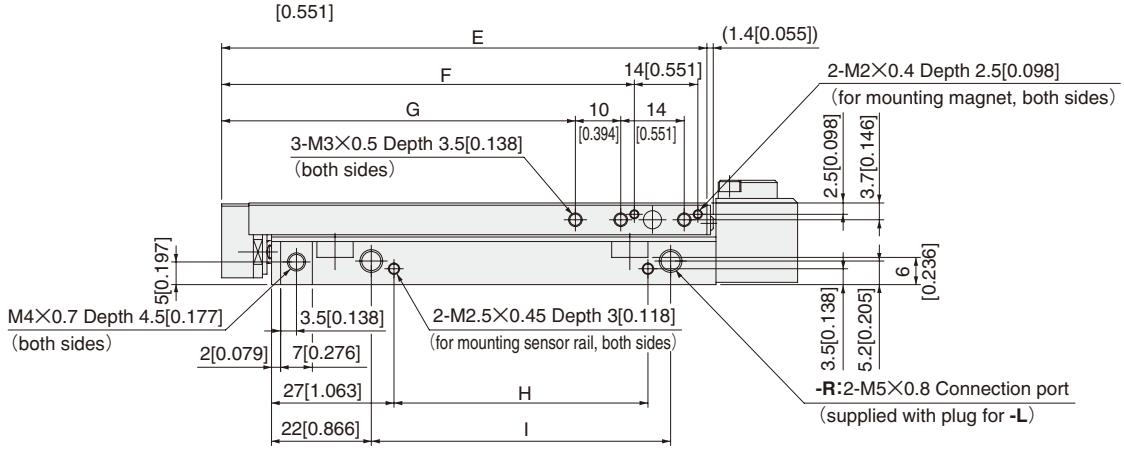

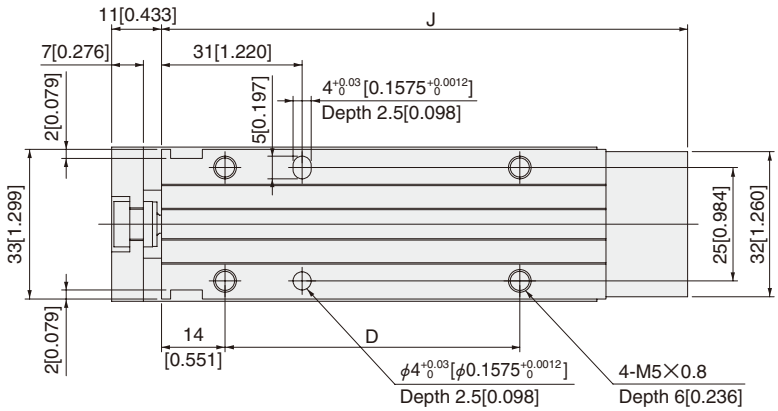

Locating pin: -P (P-MGA2)

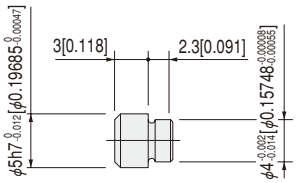

Stroke	A	B	C	D	E	F	G	H	I	J	K	N
10	87 [3.425]	—	26 [1.024]	25 [0.984]	67 [2.638]	51 [2.008]	38 [1.496]	16 [0.630]	26 [1.024]	76 [2.992]	46 [1.811]	4
20	87 [3.425]	—	26 [1.024]	25 [0.984]	67 [2.638]	51 [2.008]	38 [1.496]	16 [0.630]	26 [1.024]	76 [2.992]	46 [1.811]	4
30	107 [4.213]	—	46 [1.811]	45 [1.772]	87 [3.425]	71 [2.795]	58 [2.283]	36 [1.417]	46 [1.811]	96 [3.780]	66 [2.598]	4
40	107 [4.213]	—	46 [1.811]	45 [1.772]	87 [3.425]	71 [2.795]	58 [2.283]	36 [1.417]	46 [1.811]	96 [3.780]	66 [2.598]	4
50	127 [5.000]	66 [2.598]	33 [1.299]	65 [2.559]	107 [4.213]	91 [3.583]	78 [3.071]	56 [2.205]	66 [2.598]	116 [4.567]	86 [3.386]	6
60	127 [5.000]	66 [2.598]	33 [1.299]	65 [2.559]	107 [4.213]	91 [3.583]	78 [3.071]	56 [2.205]	66 [2.598]	116 [4.567]	86 [3.386]	6

Dimensions of Bore Size ϕ12 [0.472] mm [in.]

●**Cylinder with end keep and magnet sensor rail MGAKS12**

●**Cylinder with end keep and shock absorber MGAK□12-SSF**

Piping direction: -R

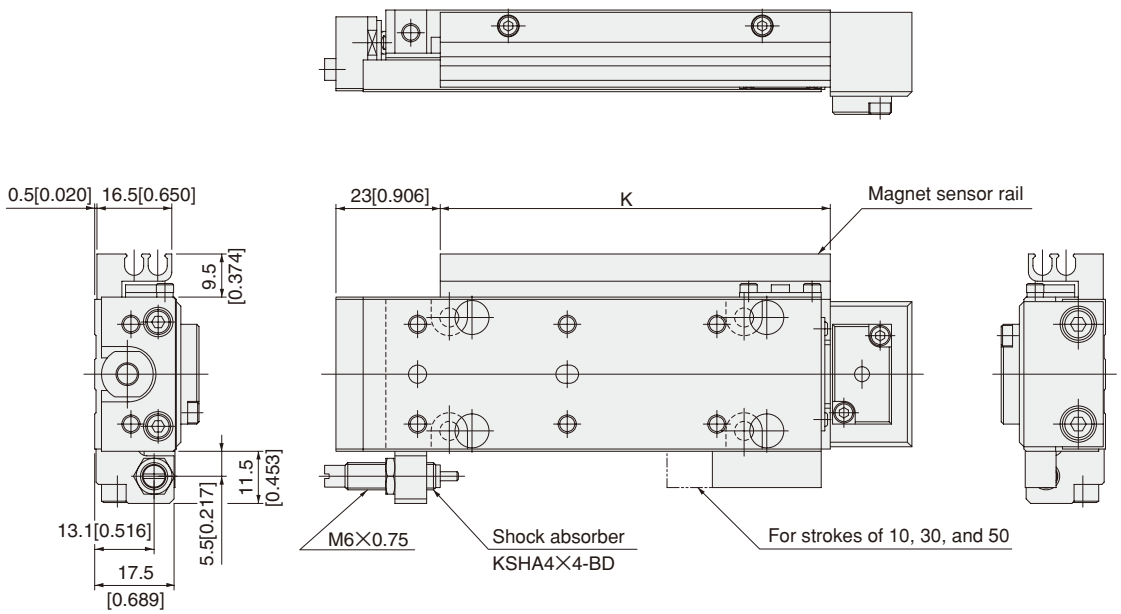

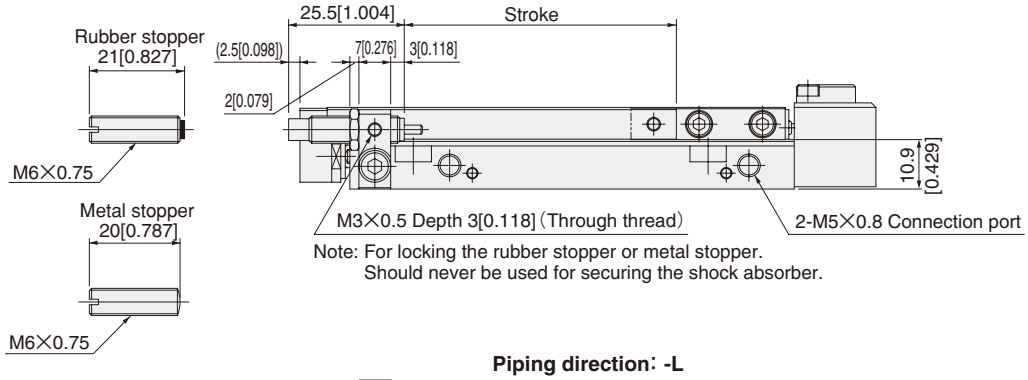

Note: For locking the rubber stopper or metal stopper.
Should never be used for securing the shock absorber.

Piping direction: -L

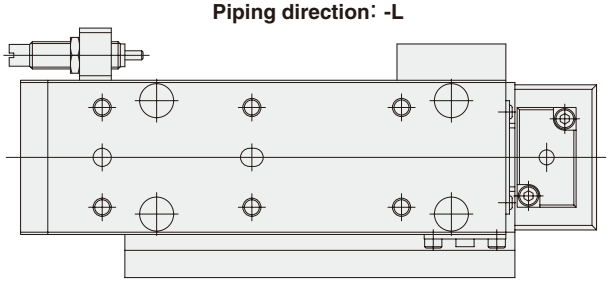

Locating pin: -P (P-MGA2)

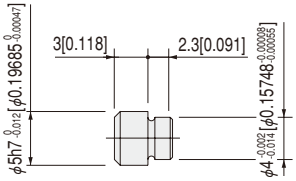

Dimensions of Bore Size ϕ 12 [0.472] mm [in.]

●Cylinder with buffer end keep

Remark: For cylinder with magnet sensor rail, see p.644.

MGAGK12

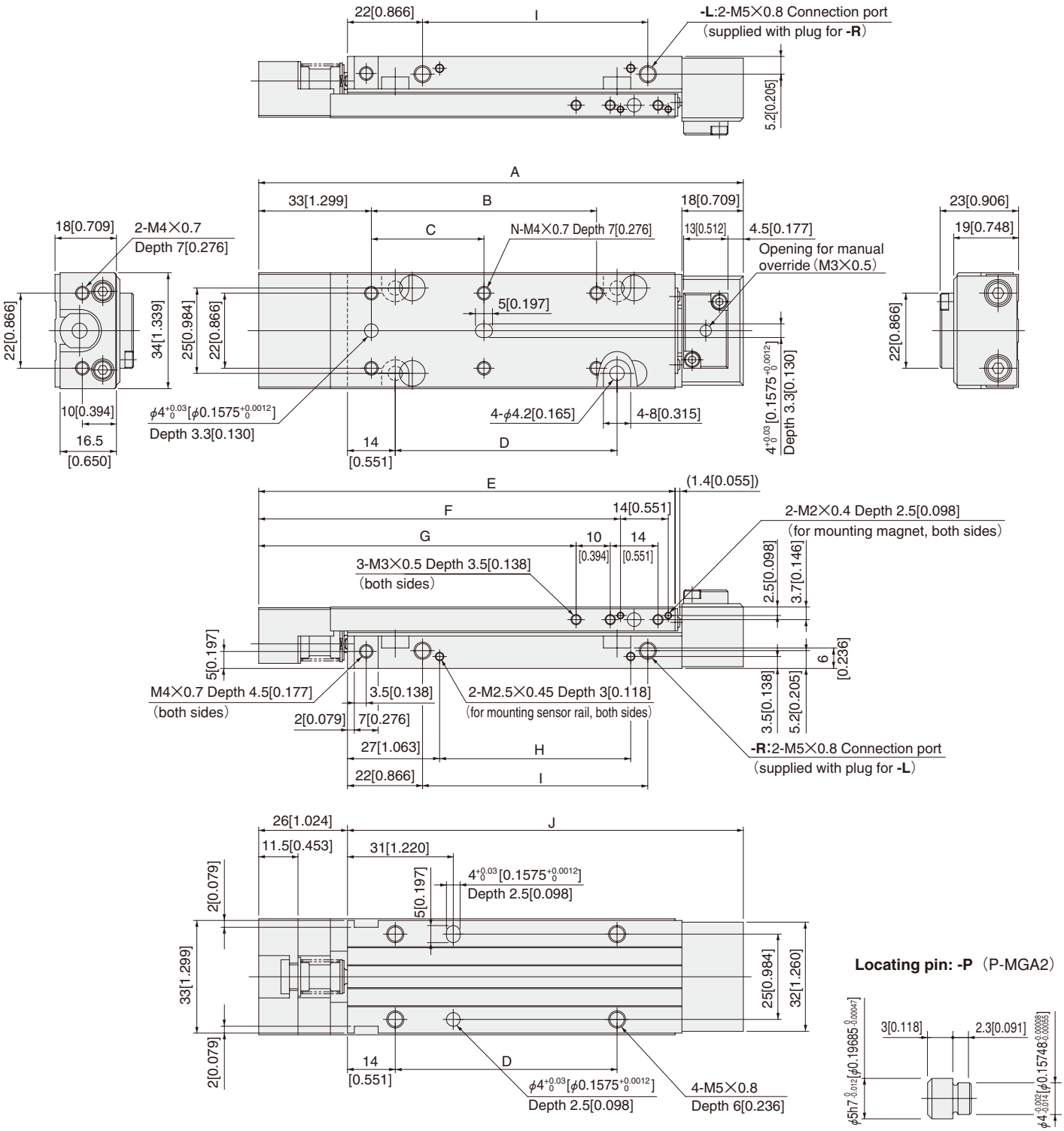

Stroke	A	B	C	D	E	F	G	H	I	J	K	N
10	102 [4.016]	—	26 [1.024]	25 [0.984]	82 [3.228]	66 [2.598]	53 [2.087]	16 [0.630]	26 [1.024]	76 [2.992]	46 [1.811]	4
20	102 [4.016]	—	26 [1.024]	25 [0.984]	82 [3.228]	66 [2.598]	53 [2.087]	16 [0.630]	26 [1.024]	76 [2.992]	46 [1.811]	4
30	122 [4.803]	—	46 [1.811]	45 [1.772]	102 [4.016]	86 [3.386]	73 [2.874]	36 [1.417]	46 [1.811]	96 [3.780]	66 [2.598]	4
40	122 [4.803]	—	46 [1.811]	45 [1.772]	102 [4.016]	86 [3.386]	73 [2.874]	36 [1.417]	46 [1.811]	96 [3.780]	66 [2.598]	4
50	142 [5.591]	66 [2.598]	33 [1.299]	65 [2.559]	122 [4.803]	106 [4.173]	93 [3.661]	56 [2.205]	66 [2.598]	116 [4.567]	8 6[3.386]	6
60	142 [5.591]	66 [2.598]	33 [1.299]	65 [2.559]	122 [4.803]	106 [4.173]	93 [3.661]	56 [2.205]	66 [2.598]	116 [4.567]	86 [3.386]	6

Remark: The buffer stroke of ϕ 12 [0.472] cylinder with buffer is a maximum of 6mm [0.236in.].

Dimensions of Bore Size ϕ 12 [0.472] mm [in.]

●Cylinder with buffer end keep and magnet sensor rail MGAGKS12

Piping direction: -R

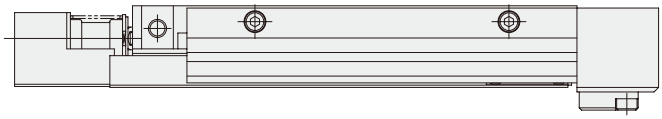

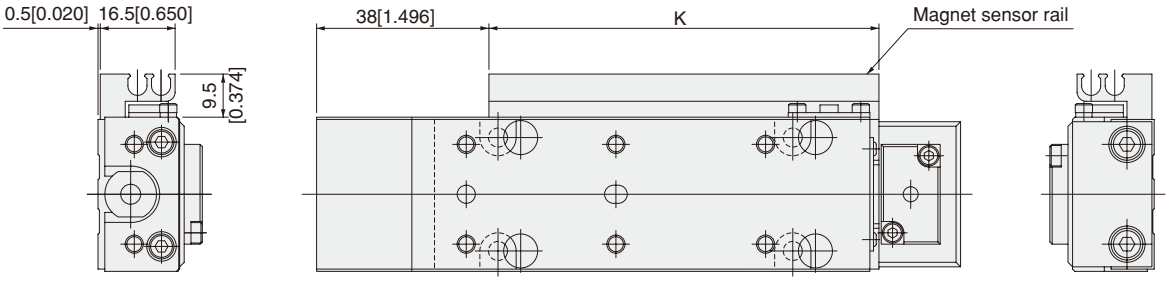

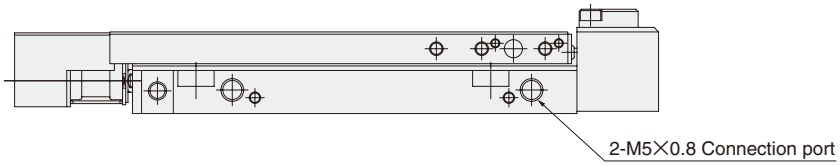

Piping direction: -L

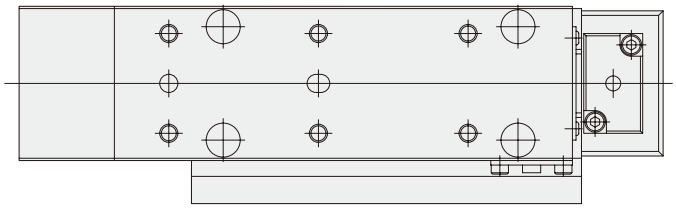

Locating pin: -P (P-MGA2)

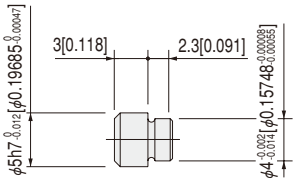

Remark: The buffer stroke of ϕ 12 [0.472] cylinder with buffer is a maximum of 6mm [0.236in.].

Dimensions of Bore Size ϕ16 [0.630] mm [in.]

●Standard cylinder MGA16

Remark: For cylinder with magnet sensor rail, see p.646.

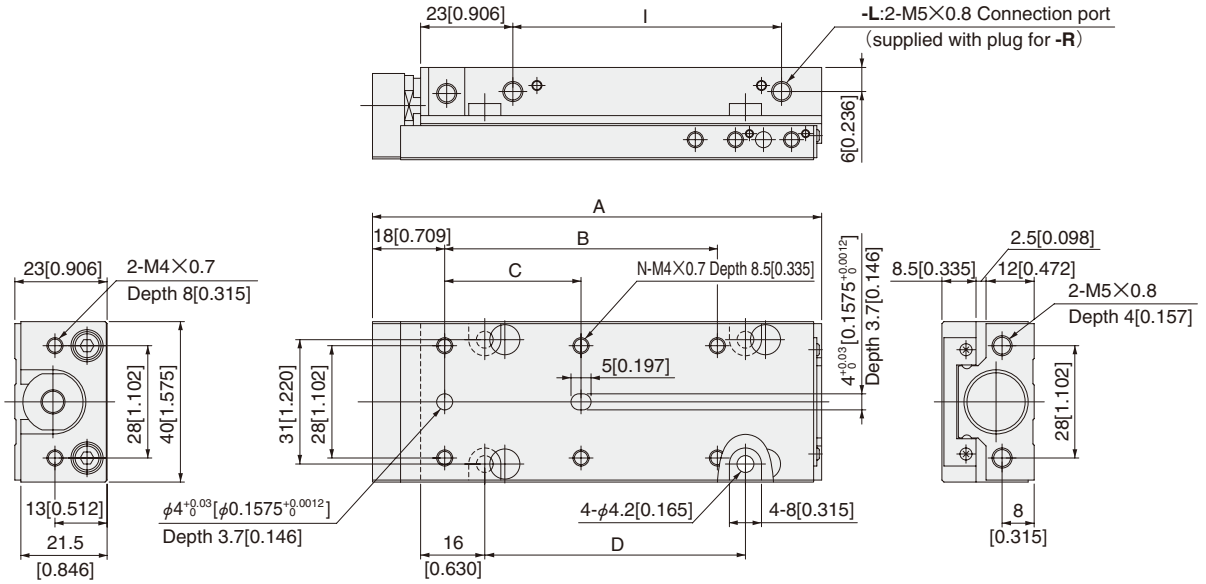

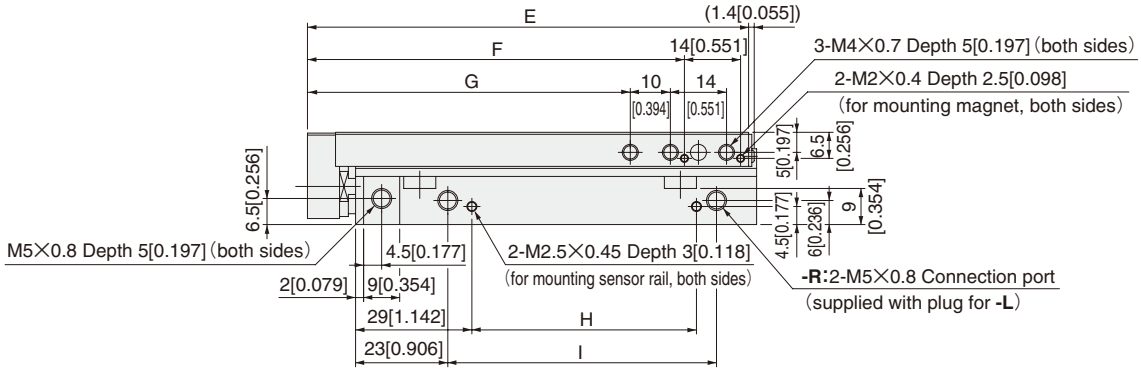

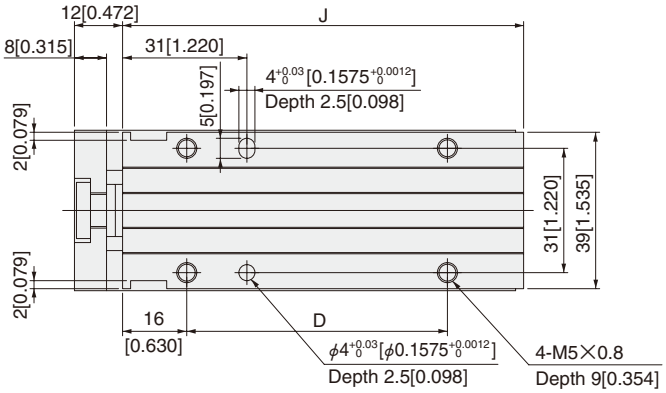

Locating pin: -P (P-MGA2)

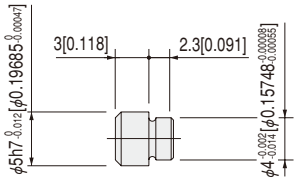

Stroke	A	B	C	D	E	F	G	H	I	J	K	N
10	72 [2.835]	—	28 [1.102]	25 [0.984]	70 [2.756]	54 [2.126]	40.5 [1.594]	16 [0.630]	27 [1.063]	60 [2.362]	46 [1.811]	4
20	72 [2.835]	—	28 [1.102]	25 [0.984]	70 [2.756]	54 [2.126]	40.5 [1.594]	16 [0.630]	27 [1.063]	60 [2.362]	46 [1.811]	4
30	92 [3.622]	—	48 [1.890]	45 [1.772]	90 [3.543]	74 [2.913]	60.5 [2.382]	36 [1.417]	47 [1.850]	80 [3.150]	66 [2.598]	4
40	92 [3.622]	—	48 [1.890]	45 [1.772]	90 [3.543]	74 [2.913]	60.5 [2.382]	36 [1.417]	47 [1.850]	80 [3.150]	66 [2.598]	4
50	112 [4.409]	68 [2.677]	34 [1.339]	65 [2.559]	110 [4.331]	94 [3.701]	80.5 [3.169]	56 [2.205]	67 [2.638]	100 [3.937]	86 [3.386]	6
60	112 [4.409]	68 [2.677]	34 [1.339]	65 [2.559]	110 [4.331]	94 [3.701]	80.5 [3.169]	56 [2.205]	67 [2.638]	100 [3.937]	86 [3.386]	6

Dimensions of Bore Size ϕ16 [0.630] mm [in.]

●Cylinder with magnet sensor rail **MGAS16**

●Cylinder with shock absorber **MGA□16-SS□**

Piping direction: -R

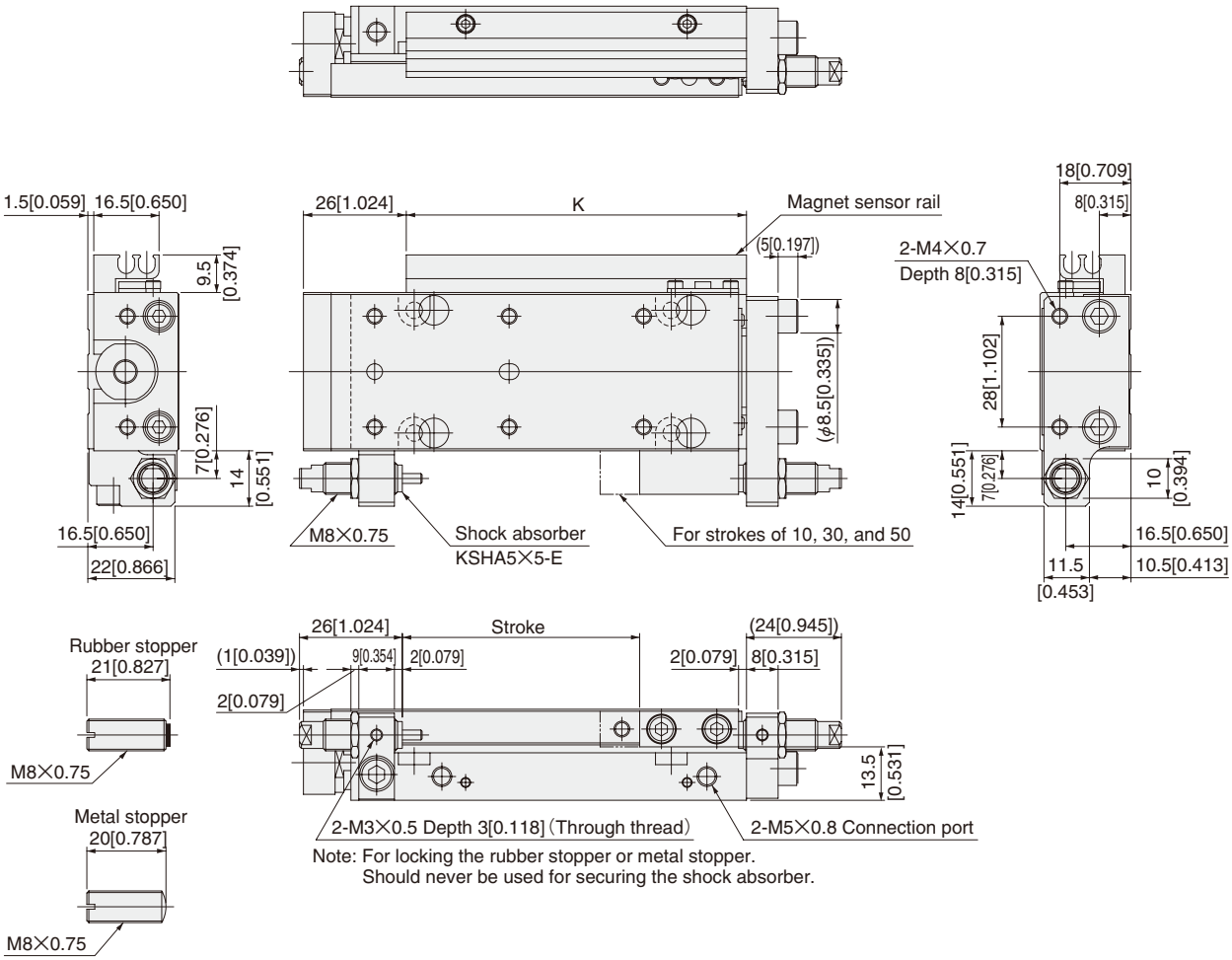

Note: For locking the rubber stopper or metal stopper.
Should never be used for securing the shock absorber.

Piping direction: -L

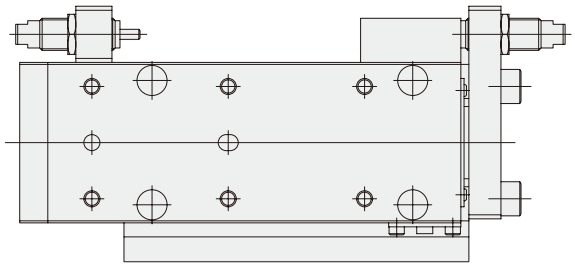

Locating pin: -P (P-MGA2)

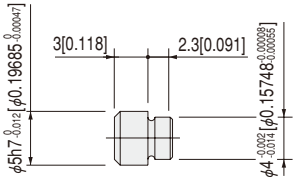

Dimensions of Bore Size ϕ16 [0.630] mm [in.]

●Cylinder with buffer

Remark: For cylinder with magnet sensor rail, see p.648.

MGAG16

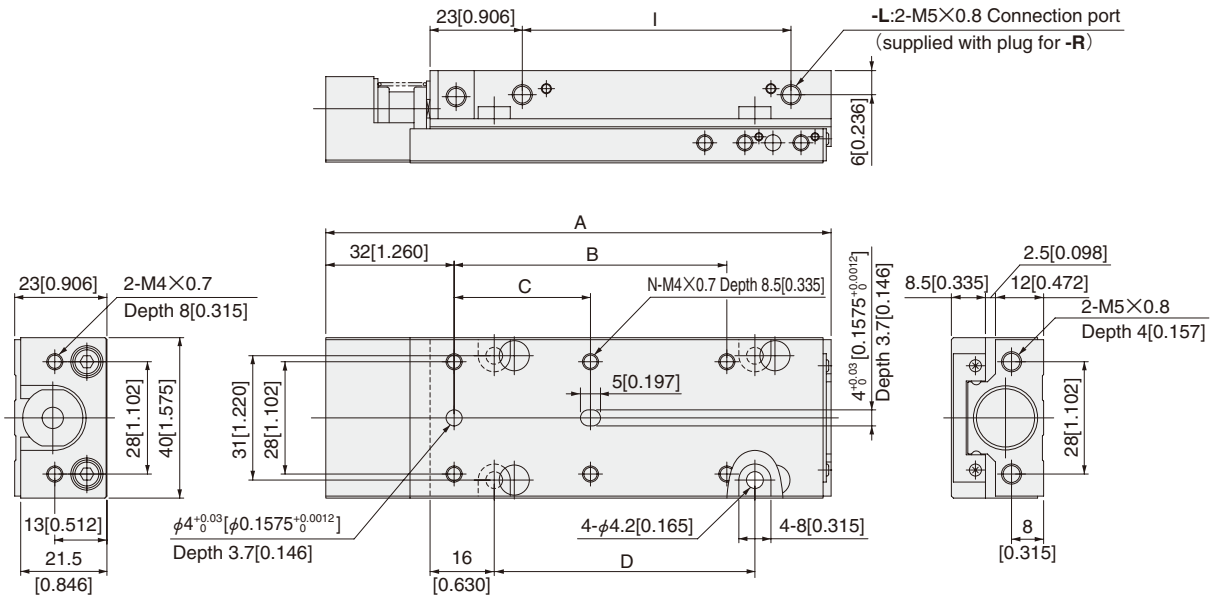

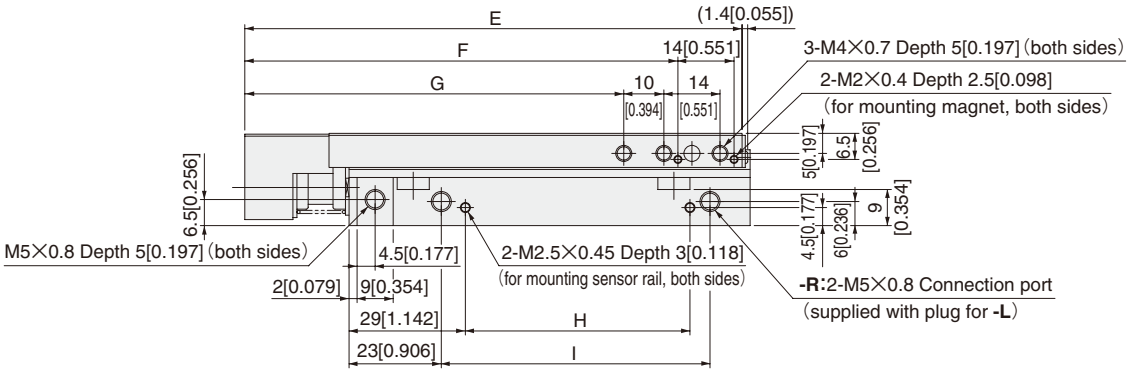

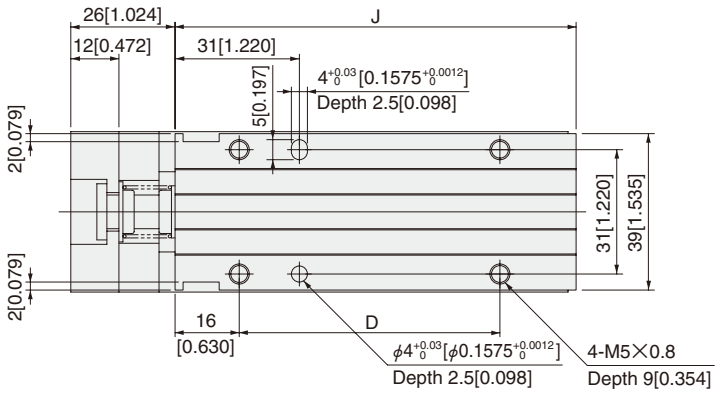

Locating pin: -P (P-MGA2)

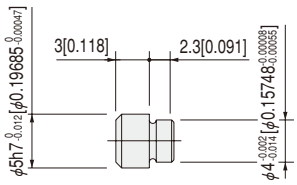

Stroke	A	B	C	D	E	F	G	H	I	J	K	N
10	86 [3.386]	—	28 [1.102]	25 [0.984]	84 [3.307]	68 [2.677]	54.5 [2.146]	16 [0.630]	27 [1.063]	60 [2.362]	46 [1.811]	4
20	86 [3.386]	—	28 [1.102]	25 [0.984]	84 [3.307]	68 [2.677]	54.5 [2.146]	16 [0.630]	27 [1.063]	60 [2.362]	46 [1.811]	4
30	106 [4.173]	—	48 [1.890]	45 [1.772]	104 [4.094]	88 [3.465]	74.5 [2.933]	36 [1.417]	47 [1.850]	80 [3.150]	66 [2.598]	4
40	106 [4.173]	—	48 [1.890]	45 [1.772]	104 [4.094]	88 [3.465]	74.5 [2.933]	36 [1.417]	47 [1.850]	80 [3.150]	66 [2.598]	4
50	126 [4.961]	68 [2.677]	34 [1.339]	65 [2.559]	124 [4.882]	108 [4.252]	94.5 [3.720]	56 [2.205]	67 [2.638]	100 [3.937]	86 [3.386]	6
60	126 [4.961]	68 [2.677]	34 [1.339]	65 [2.559]	124 [4.882]	108 [4.252]	94.5 [3.720]	56 [2.205]	67 [2.638]	100 [3.937]	86 [3.386]	6

Remark: The buffer stroke of ϕ16 [0.630] cylinder with buffer is a maximum of 6mm [0.236in.].

Dimensions of Bore Size ϕ16 [0.630] mm [in.]

●Cylinder with buffer and magnet sensor rail MGAGS16
●Cylinder with buffer and shock absorber MGAG□16-SSR

Piping direction: -R

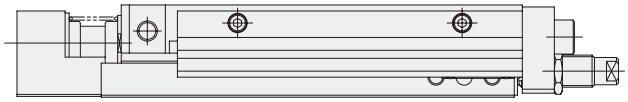

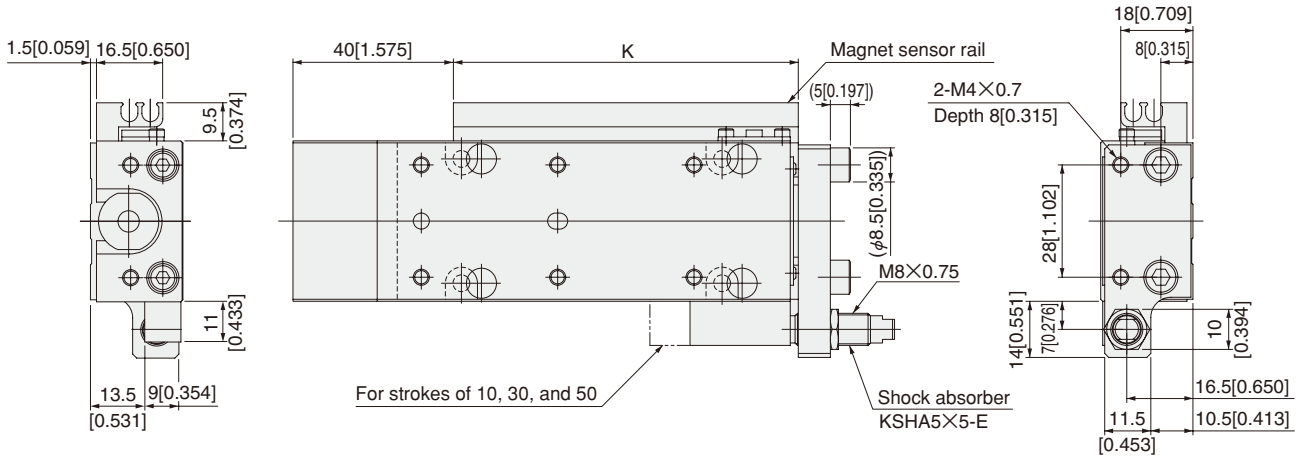

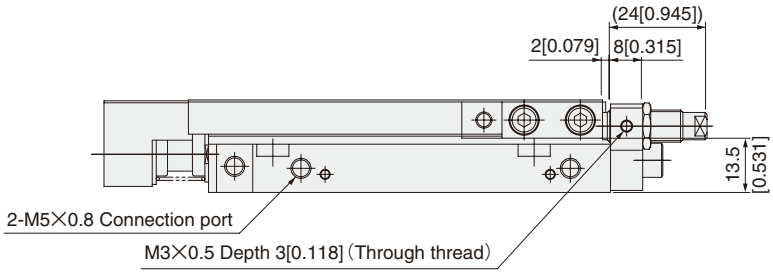

Note: For locking the rubber stopper or metal stopper.
Should never be used for securing the shock absorber.

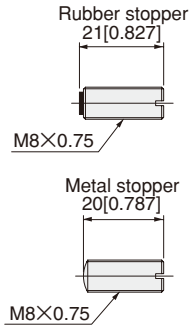

Piping direction: -L

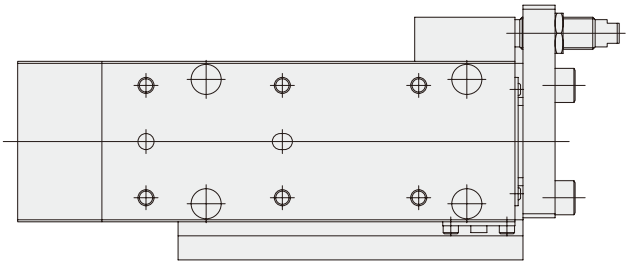

Locating pin: -P (P-MGA2)

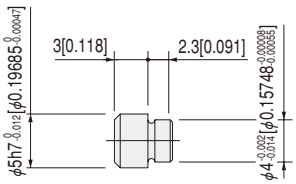

Remark: The buffer stroke of ϕ16 [0.630] cylinder with buffer is a maximum of 6mm [0.236in.].

Dimensions of Bore Size ϕ16 [0.630] mm [in.]

●Cylinder with end keep

Remark: For cylinder with magnet sensor rail, see p.650.

MGAK16

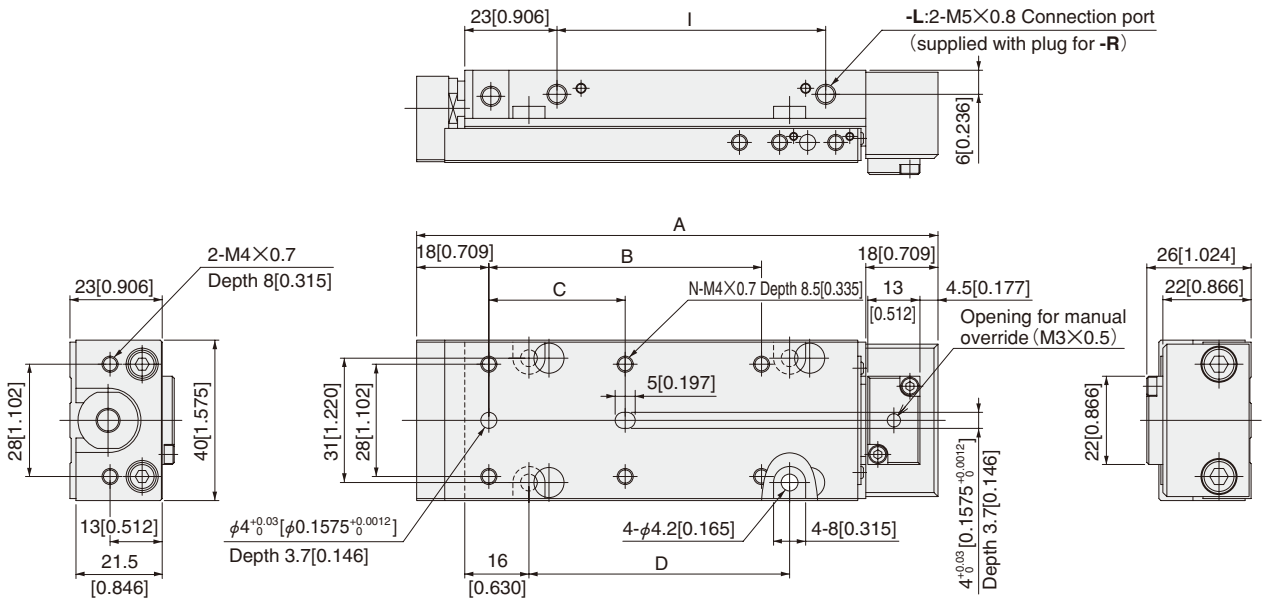

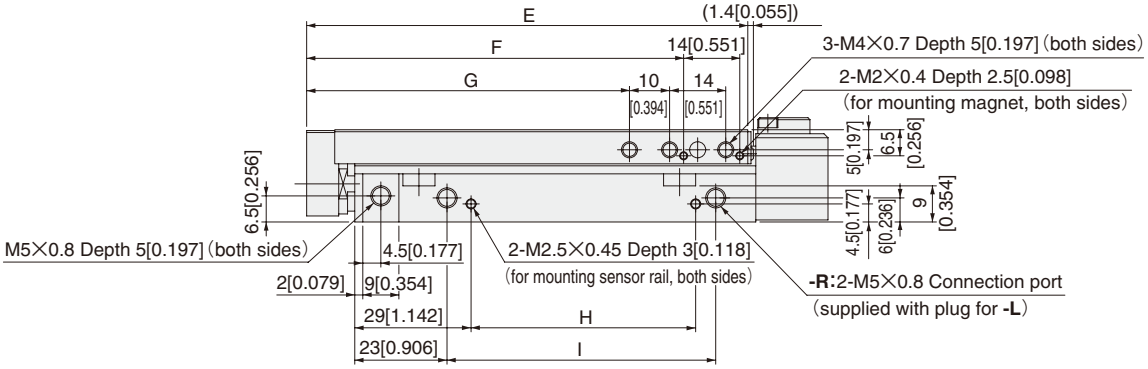

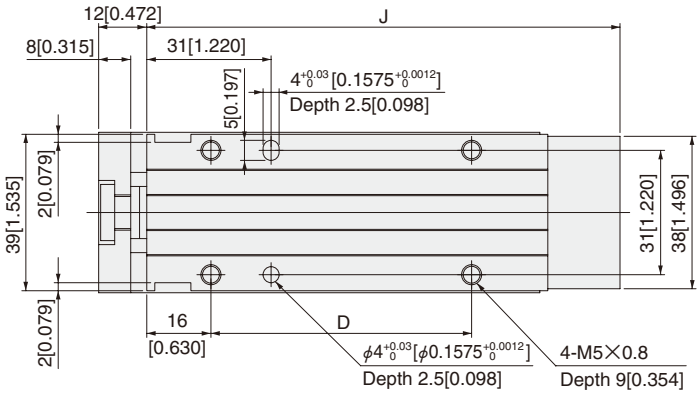

Locating pin: -P (P-MGA2)

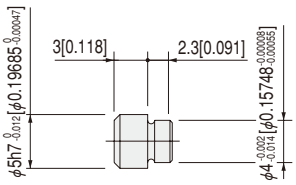

Stroke	A	B	C	D	E	F	G	H	I	J	K	N
10	90 [3.543]	—	28 [1.102]	25 [0.984]	70 [2.756]	54 [2.126]	40.5 [1.594]	16 [0.630]	27 [1.063]	78 [3.071]	46 [1.811]	4
20	90 [3.543]	—	28 [1.102]	25 [0.984]	70 [2.756]	54 [2.126]	40.5 [1.594]	16 [0.630]	27 [1.063]	78 [3.071]	46 [1.811]	4
30	110 [4.331]	—	48 [1.890]	45 [1.772]	90 [3.543]	74 [2.913]	60.5 [2.382]	36 [1.417]	47 [1.850]	98 [3.858]	66 [2.598]	4
40	110 [4.331]	—	48 [1.890]	45 [1.772]	90 [3.543]	74 [2.913]	60.5 [2.382]	36 [1.417]	47 [1.850]	98 [3.858]	66 [2.598]	4
50	130 [5.118]	68 [2.677]	34 [1.339]	65 [2.559]	110 [4.331]	94 [3.701]	80.5 [3.169]	56 [2.205]	67 [2.638]	118 [4.646]	86 [3.386]	6
60	130 [5.118]	68 [2.677]	34 [1.339]	65 [2.559]	110 [4.331]	94 [3.701]	80.5 [3.169]	56 [2.205]	67 [2.638]	118 [4.646]	86 [3.386]	6

Dimensions of Bore Size ϕ16 [0.630] mm [in.]

●Cylinder with end keep and magnet sensor rail **MGAKS16**

●Cylinder with end keep and shock absorber **MGAK□16-SSF**

Piping direction: -R

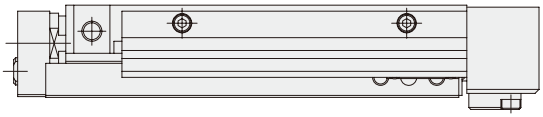

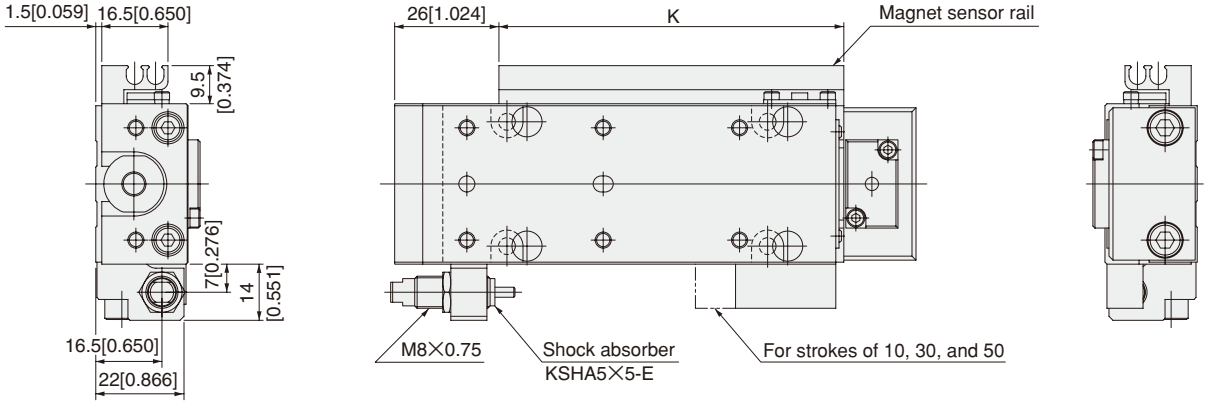

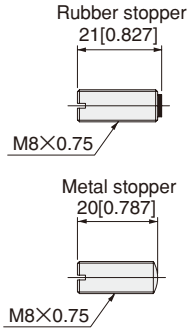

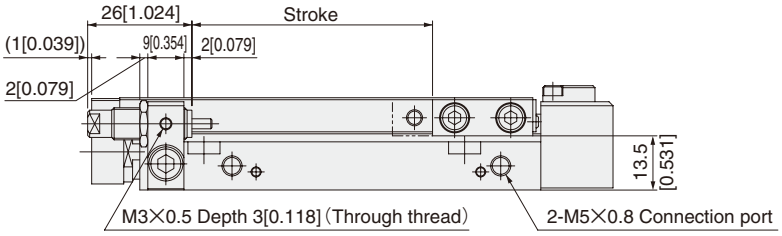

Note: For locking the rubber stopper or metal stopper.
Should never be used for securing the shock absorber.

Piping direction: -L

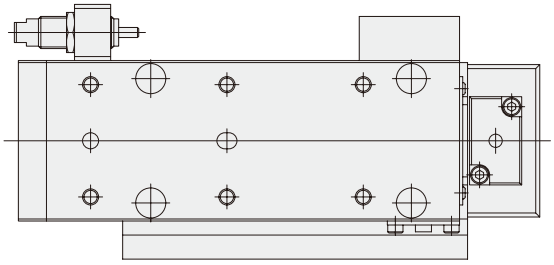

Locating pin: -P (P-MGA2)

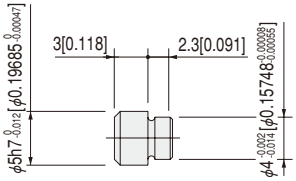

Dimensions of Bore Size ϕ16 [0.630] mm [in.]

●Cylinder with buffer end keep MGAGK16

Remark: For cylinder with magnet sensor rail, see p.652.

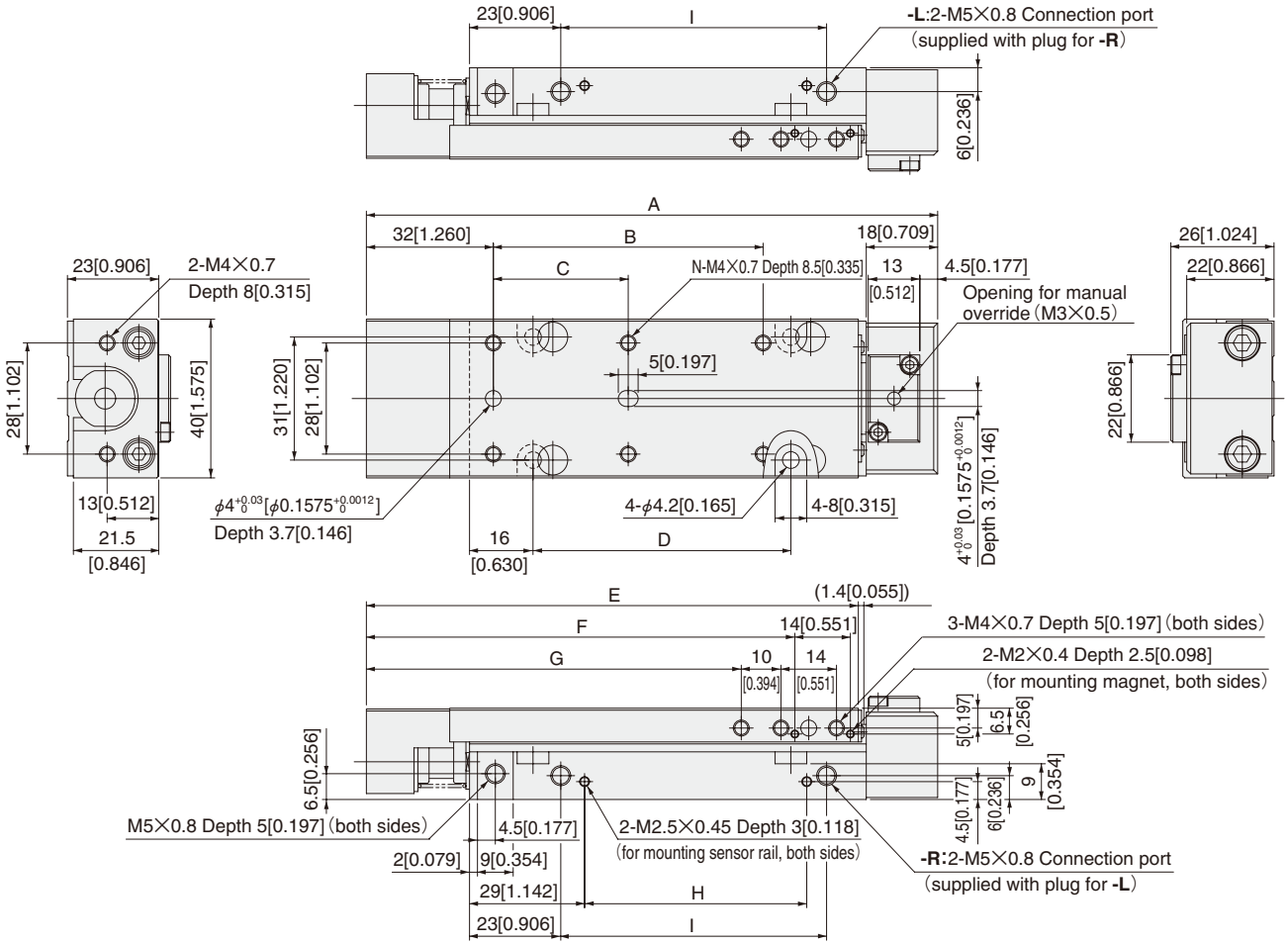

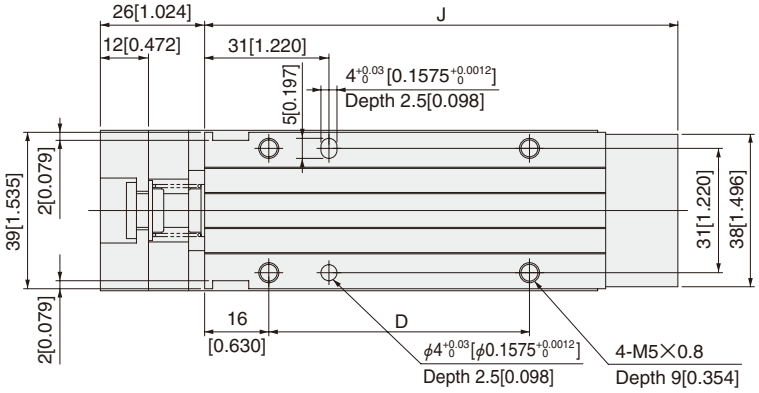

Locating pin: -P (P-MGA2)

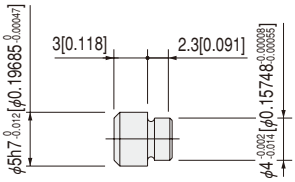

Stroke	A	B	C	D	E	F	G	H	I	J	K	N
10	104 [4.094]	—	28 [1.102]	25 [0.984]	84 [3.307]	68 [2.677]	54.5 [2.146]	16 [0.630]	27 [1.063]	78 [3.071]	46 [1.811]	4
20	104 [4.094]	—	28 [1.102]	25 [0.984]	84 [3.307]	68 [2.677]	54.5 [2.146]	16 [0.630]	27 [1.063]	78 [3.071]	46 [1.811]	4
30	124 [4.882]	—	48 [1.890]	45 [1.772]	104 [4.094]	88 [3.465]	74.5 [2.933]	36 [1.417]	47 [1.850]	98 [3.858]	66 [2.598]	4
40	124 [4.882]	—	48 [1.890]	45 [1.772]	104 [4.094]	88 [3.465]	74.5 [2.933]	36 [1.417]	47 [1.850]	98 [3.858]	66 [2.598]	4
50	144 [5.669]	68 [2.677]	34 [1.339]	65 [2.559]	124 [4.882]	108 [4.252]	94.5 [3.720]	56 [2.205]	67 [2.638]	118 [4.646]	86 [3.386]	6
60	144 [5.669]	68 [2.677]	34 [1.339]	65 [2.559]	124 [4.882]	108 [4.252]	94.5 [3.720]	56 [2.205]	67 [2.638]	118 [4.646]	86 [3.386]	6

Remark: The buffer stroke of ϕ16 [0.630] cylinder with buffer is a maximum of 6mm [0.236in.].

Dimensions of Bore Size ϕ16 [0.630] mm [in.]

●Cylinder with buffer end keep and magnet sensor rail MGAGKS16

Piping direction: -R

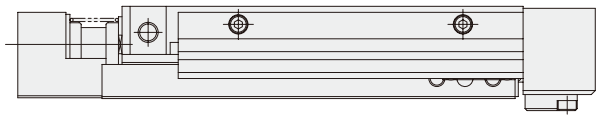

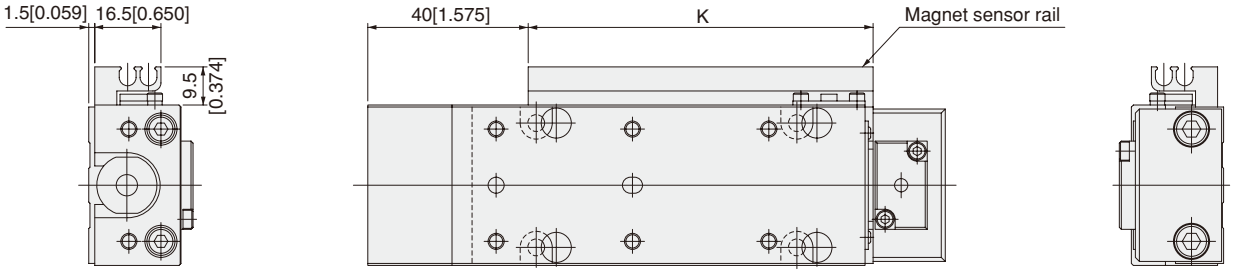

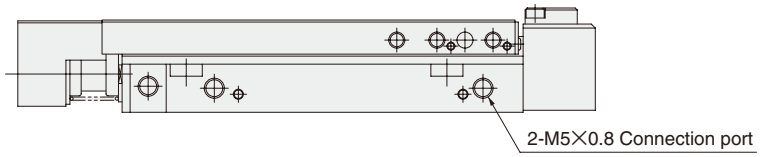

Piping direction: -L

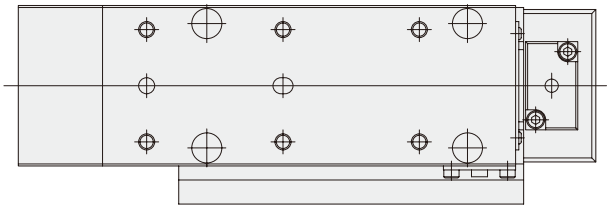

Locating pin: -P (P-MGA2)

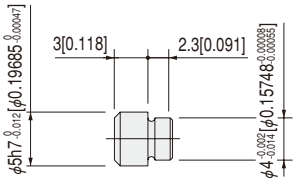

Remark: The buffer stroke of ϕ16 [0.630] cylinder with buffer is a maximum of 6mm [0.236in.].

●Standard cylinder

Remark: For cylinder with magnet sensor rail, see p.654.

MGA20

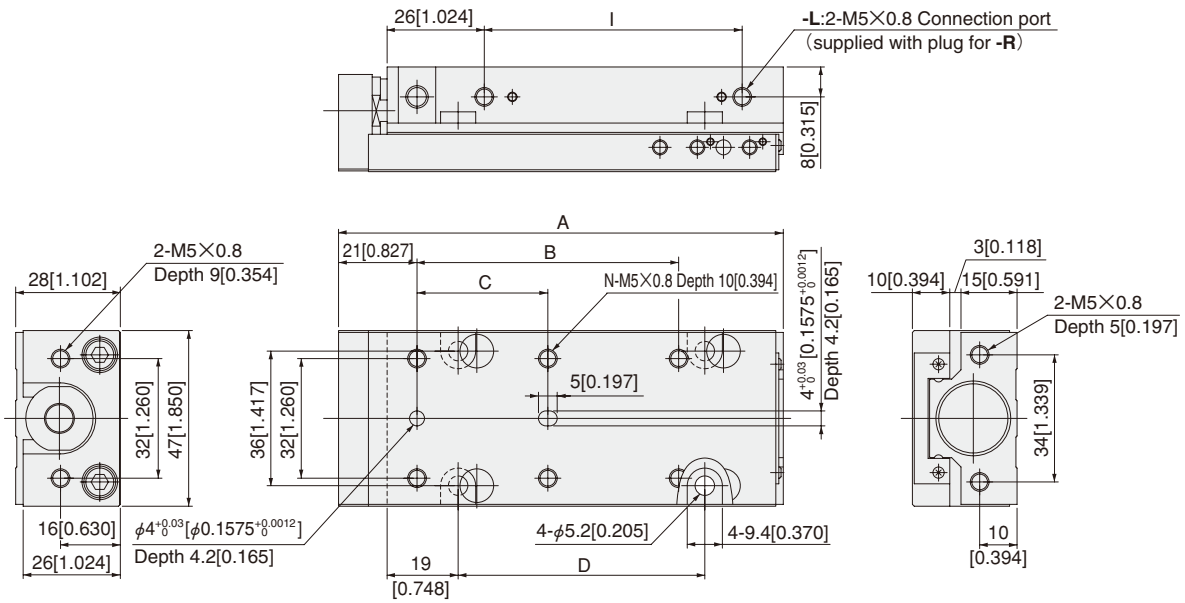

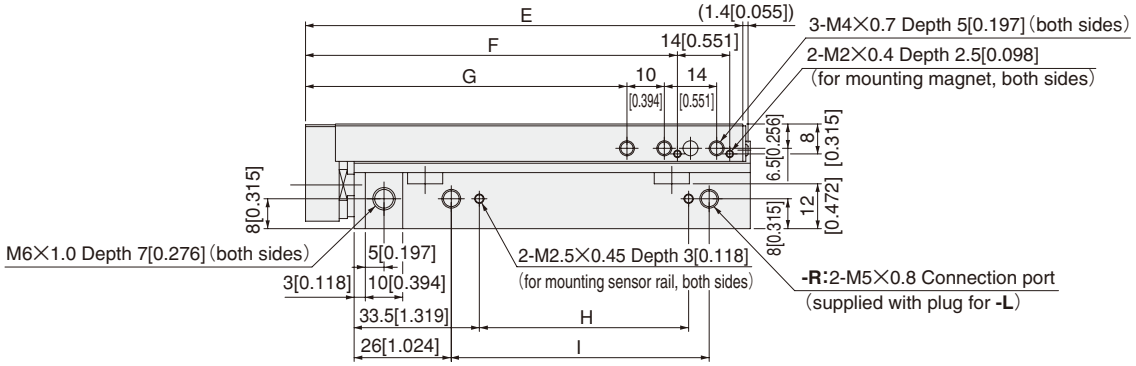

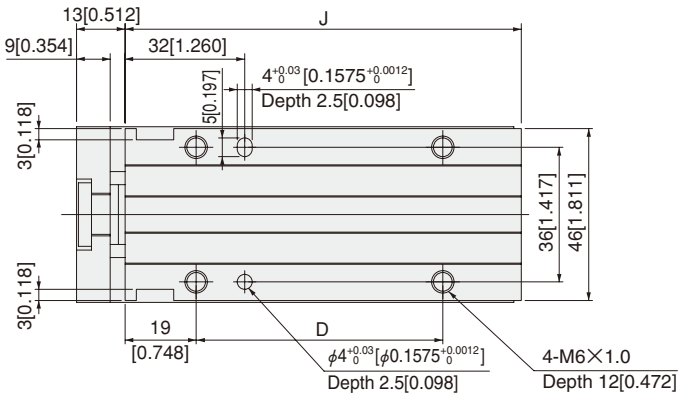

Locating pin: -P (P-MGA2)

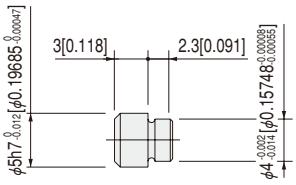

Stroke	A	B	C	D	E	F	G	H	I	J	K	N
10	79 [3.110]	—	30 [1.181]	26 [1.024]	77 [3.031]	59.5 [2.343]	46 [1.811]	16 [0.630]	29 [1.142]	66 [2.598]	46 [1.811]	4
20	79 [3.110]	—	30 [1.181]	26 [1.024]	77 [3.031]	59.5 [2.343]	46 [1.811]	16 [0.630]	29 [1.142]	66 [2.598]	46 [1.811]	4
30	99 [3.898]	—	50 [1.969]	46 [1.811]	97 [3.819]	79.5 [3.130]	66 [2.598]	36 [1.417]	49 [1.929]	86 [3.386]	66 [2.598]	4
40	99 [3.898]	—	50 [1.969]	46 [1.811]	97 [3.819]	79.5 [3.130]	66 [2.598]	36 [1.417]	49 [1.929]	86 [3.386]	66 [2.598]	4
50	119 [4.685]	70 [2.756]	35 [1.378]	66 [2.598]	117 [4.606]	99.5 [3.917]	86 [3.386]	56 [2.205]	69 [2.717]	106 [4.173]	86 [3.386]	6
60	119 [4.685]	70 [2.756]	35 [1.378]	66 [2.598]	117 [4.606]	99.5 [3.917]	86 [3.386]	56 [2.205]	69 [2.717]	106 [4.173]	86 [3.386]	6
70	139 [5.472]	90 [3.543]	45 [1.772]	86 [3.386]	137 [5.394]	119.5 [4.705]	106 [4.173]	76 [2.992]	89 [3.504]	126 [4.961]	106 [4.173]	6
80	139 [5.472]	90 [3.543]	45 [1.772]	86 [3.386]	137 [5.394]	119.5 [4.705]	106 [4.173]	76 [2.992]	89 [3.504]	126 [4.961]	106 [4.173]	6

Dimensions of Bore Size ϕ20 [0.787] mm [in.]

●Cylinder with magnet sensor rail **MGAS20**

●Cylinder with shock absorber **MGA□20-SS□**

Piping direction: -R

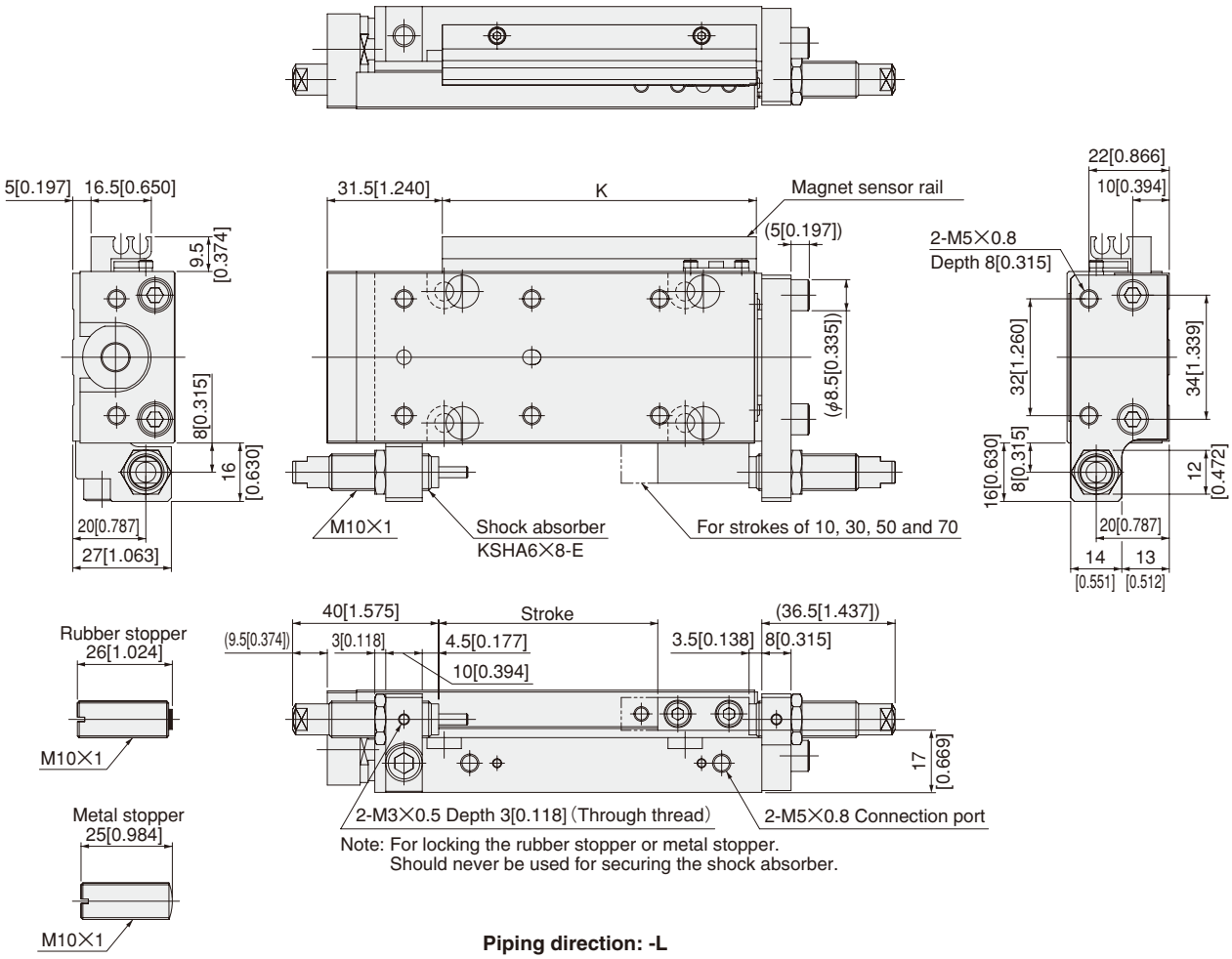

Piping direction: -L

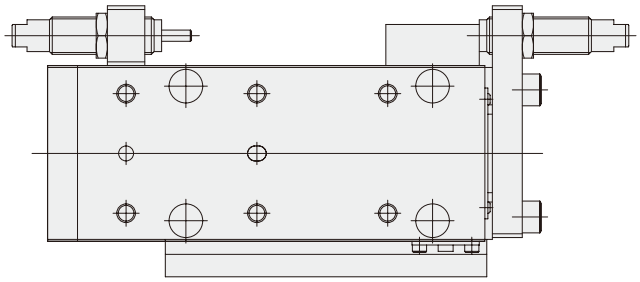

Locating pin: -P (P-MGA2)

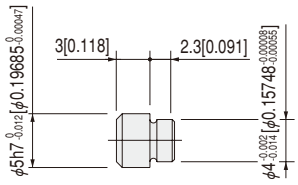

Dimensions of Bore Size ϕ20 [0.787] mm [in.]

●Cylinder with buffer

Remark: For cylinder with magnet sensor rail, see p.656.

MGAG□20

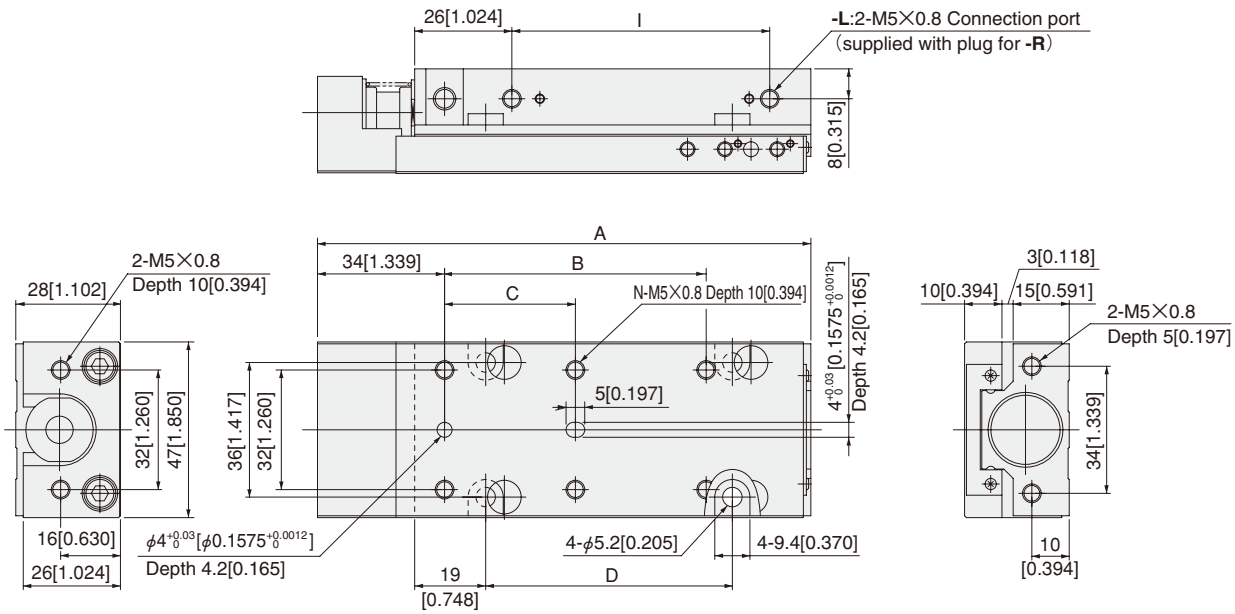

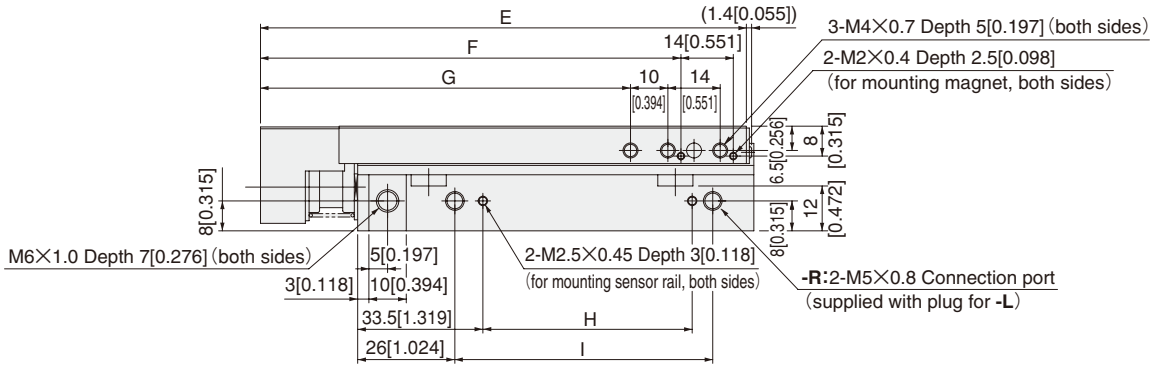

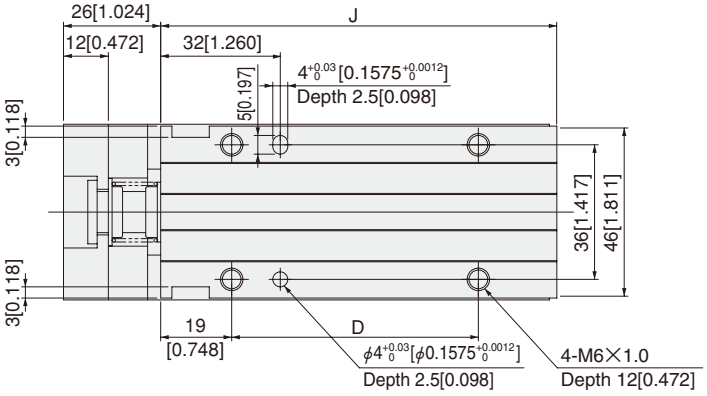

Locating pin: -P (P-MGA2)

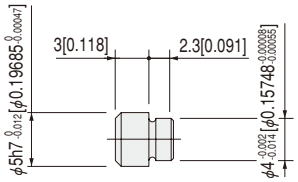

Stroke	A	B	C	D	E	F	G	H	I	J	K	N
10	92 [3.622]	—	30 [1.181]	26 [1.024]	90 [3.543]	72.5 [2.854]	59 [2.323]	16 [0.630]	29 [1.142]	66 [2.598]	46 [1.811]	4
20	92 [3.622]	—	30 [1.181]	26 [1.024]	90 [3.543]	72.5 [2.854]	59 [2.323]	16 [0.630]	29 [1.142]	66 [2.598]	46 [1.811]	4
30	112 [4.409]	—	50 [1.969]	46 [1.811]	110 [4.331]	92.5 [3.642]	79 [3.110]	36 [1.417]	49 [1.929]	86 [3.386]	66 [2.598]	4
40	112 [4.409]	—	50 [1.969]	46 [1.811]	110 [4.331]	92.5 [3.642]	79 [3.110]	36 [1.417]	49 [1.929]	86 [3.386]	66 [2.598]	4
50	132 [5.197]	70 [2.756]	35 [1.378]	66 [2.598]	130 [5.118]	112.5 [4.429]	99 [3.898]	56 [2.205]	69 [2.717]	106 [4.173]	86 [3.386]	6
60	132 [5.197]	70 [2.756]	35 [1.378]	66 [2.598]	130 [5.118]	112.5 [4.429]	99 [3.898]	56 [2.205]	69 [2.717]	106 [4.173]	86 [3.386]	6
70	152 [5.984]	90 [3.543]	45 [1.772]	86 [3.386]	150 [5.906]	132.5 [5.217]	119 [4.685]	76 [2.992]	89 [3.504]	126 [4.961]	106 [4.173]	6
80	152 [5.984]	90 [3.543]	45 [1.772]	86 [3.386]	150 [5.906]	132.5 [5.217]	119 [4.685]	76 [2.992]	89 [3.504]	126 [4.961]	106 [4.173]	6

Remark: The buffer stroke of ϕ20 [0.787] cylinder with buffer is a maximum of 6mm [0.236in.].

Dimensions of Bore Size ϕ20 [0.787] mm [in.]

●Cylinder with buffer and magnet sensor rail MGAGS20
●Cylinder with buffer and shock absorber MGAG□20-SSR

Piping direction: -R

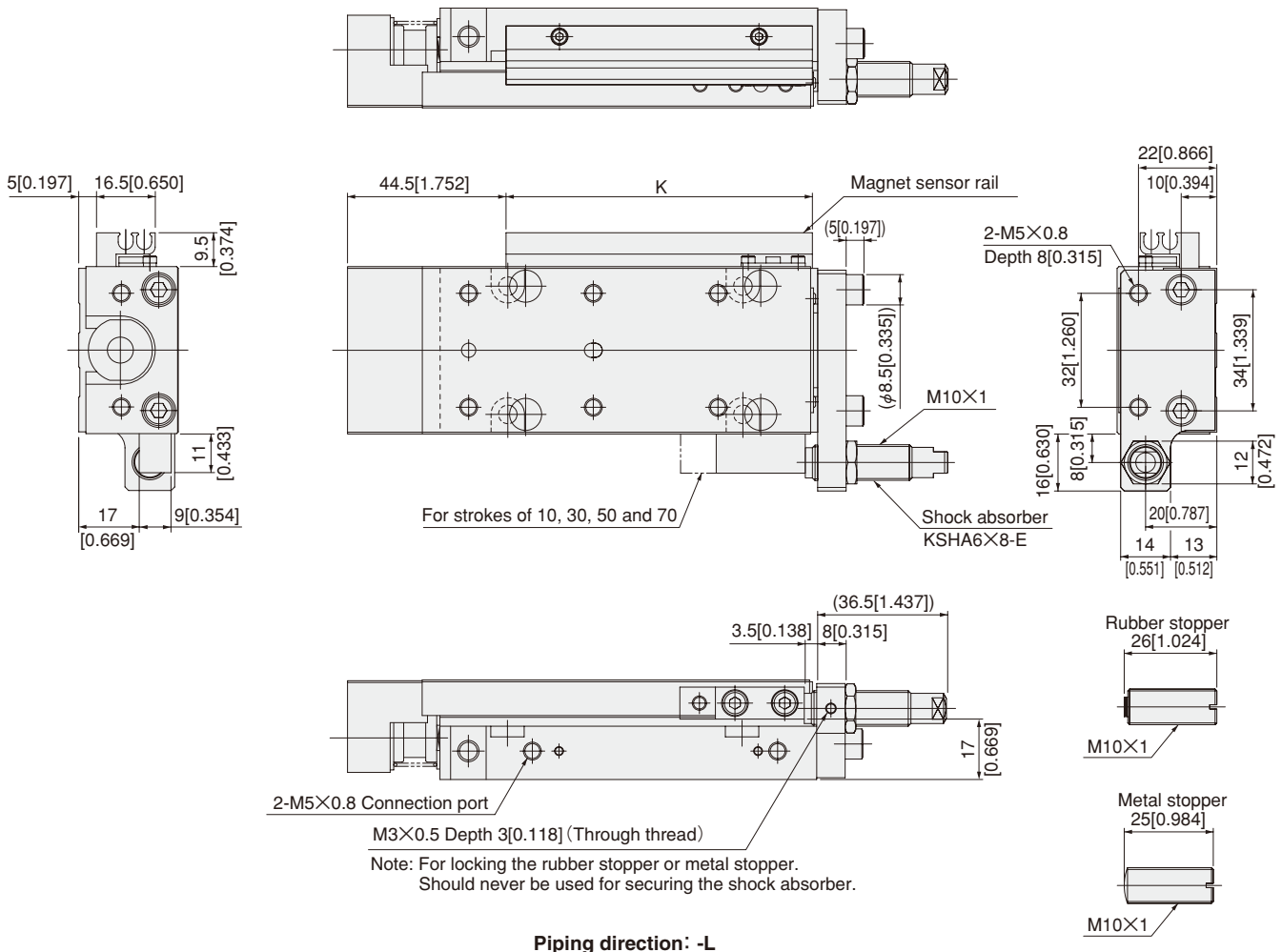

Piping direction: -L

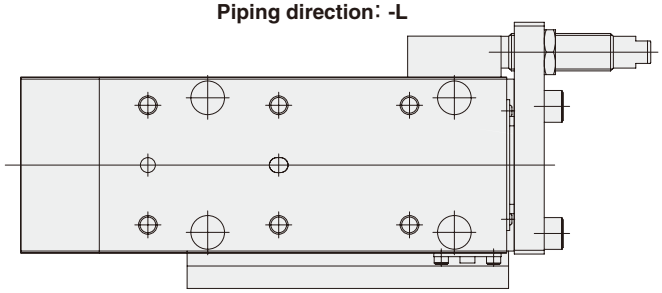

Locating pin: -P (P-MGA2)

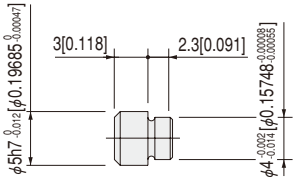

Remark: The buffer stroke of ϕ20 [0.787] cylinder with buffer is a maximum of 6mm [0.236in.].

Dimensions of Bore Size ϕ20 [0.787] mm [in.]

●Cylinder with end keep MGAK20

Remark: For cylinder with magnet sensor rail, see p.658.

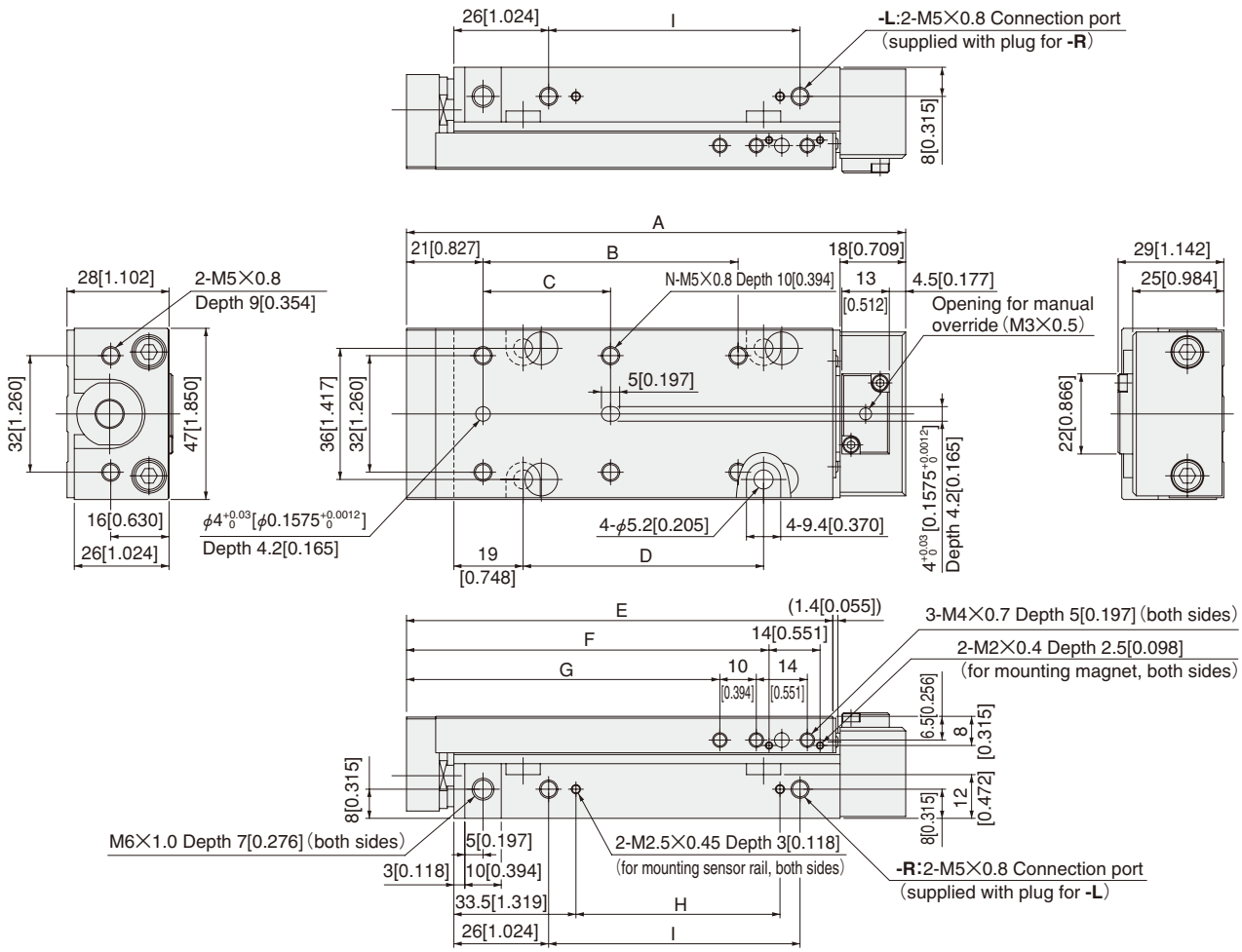

Locating pin: -P (P-MGA2)

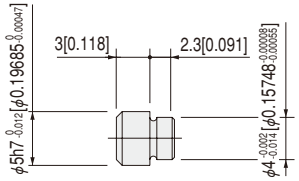

Stroke	A	B	C	D	E	F	G	H	I	J	K	N
10	97 [3.819]	—	30 [1.181]	26 [1.024]	77 [3.031]	59.5 [2.343]	46[1.811]	16 [0.630]	29 [1.142]	84 [3.307]	46 [1.811]	4
20	97 [3.819]	—	30 [1.181]	26 [1.024]	77 [3.031]	59.5 [2.343]	46[1.811]	16 [0.630]	29 [1.142]	84 [3.307]	46 [1.811]	4
30	117 [4.606]	—	50 [1.969]	46 [1.811]	97 [3.819]	79.5 [3.130]	66[2.598]	36 [1.417]	49 [1.929]	104 [4.094]	66 [2.598]	4
40	117 [4.606]	—	50 [1.969]	46 [1.811]	97 [3.819]	79.5 [3.130]	66[2.598]	36 [1.417]	49 [1.929]	104 [4.094]	66 [2.598]	4
50	137 [5.394]	70 [2.756]	35 [1.378]	66 [2.598]	117 [4.606]	99.5 [3.917]	86[3.386]	56 [2.205]	69 [2.717]	124 [4.882]	86 [3.386]	6
60	137 [5.394]	70 [2.756]	35 [1.378]	66 [2.598]	117 [4.606]	99.5 [3.917]	86[3.386]	56 [2.205]	69 [2.717]	124 [4.882]	86 [3.386]	6
70	157 [6.181]	90 [3.543]	45 [1.772]	86 [3.386]	137 [5.394]	119.5 [4.705]	106[4.173]	76 [2.992]	89 [3.504]	144 [5.669]	106 [4.173]	6
80	157 [6.181]	90 [3.543]	45 [1.772]	86 [3.386]	137 [5.394]	119.5 [4.705]	106[4.173]	76 [2.992]	89 [3.504]	144 [5.669]	106 [4.173]	6

Dimensions of Bore Size ϕ20 [0.787] mm [in.]

●Cylinder with end keep and magnet sensor rail **MGAKS20**

●Cylinder with end keep and shock absorber **MGAK□20-SSF**

Piping direction: -R

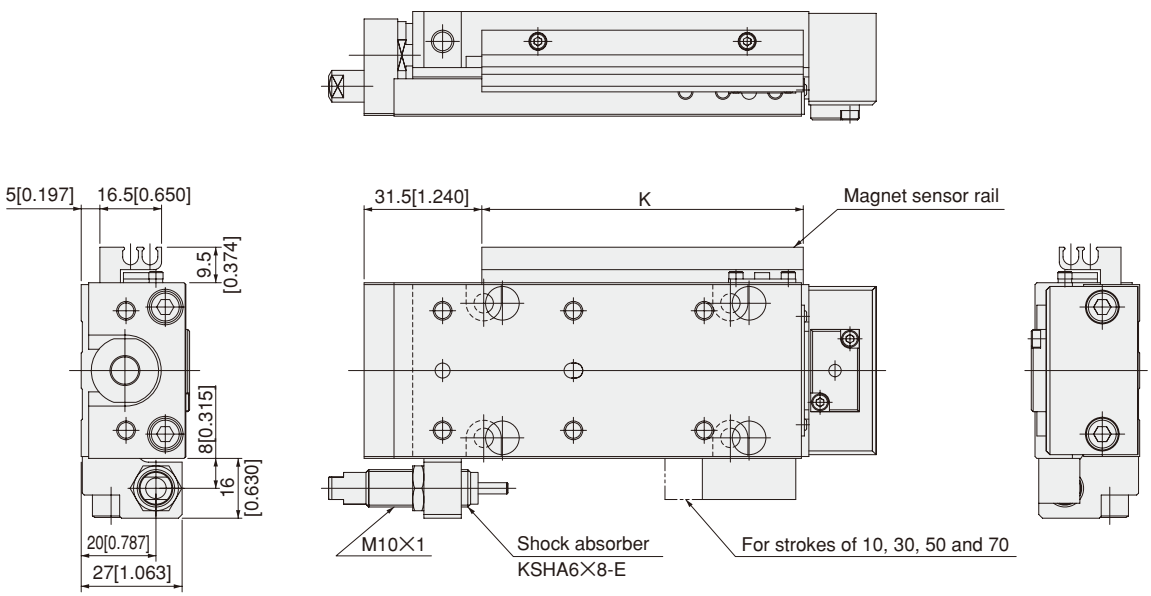

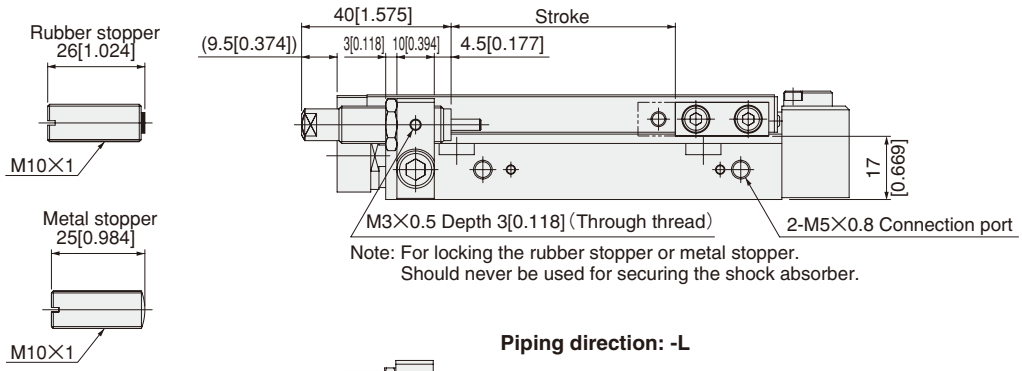

Note: For locking the rubber stopper or metal stopper.
Should never be used for securing the shock absorber.

Piping direction: -L

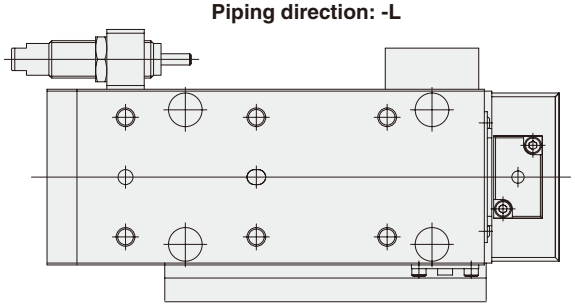

Locating pin: -P (P-MGA2)

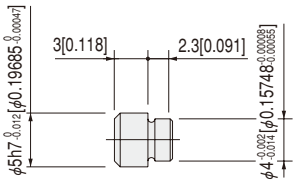

Dimensions of Bore Size ϕ20 [0.787] mm [in.]

●Cylinder with buffer end keep MGAGK20

Remark: For cylinder with magnet sensor rail, see p.660.

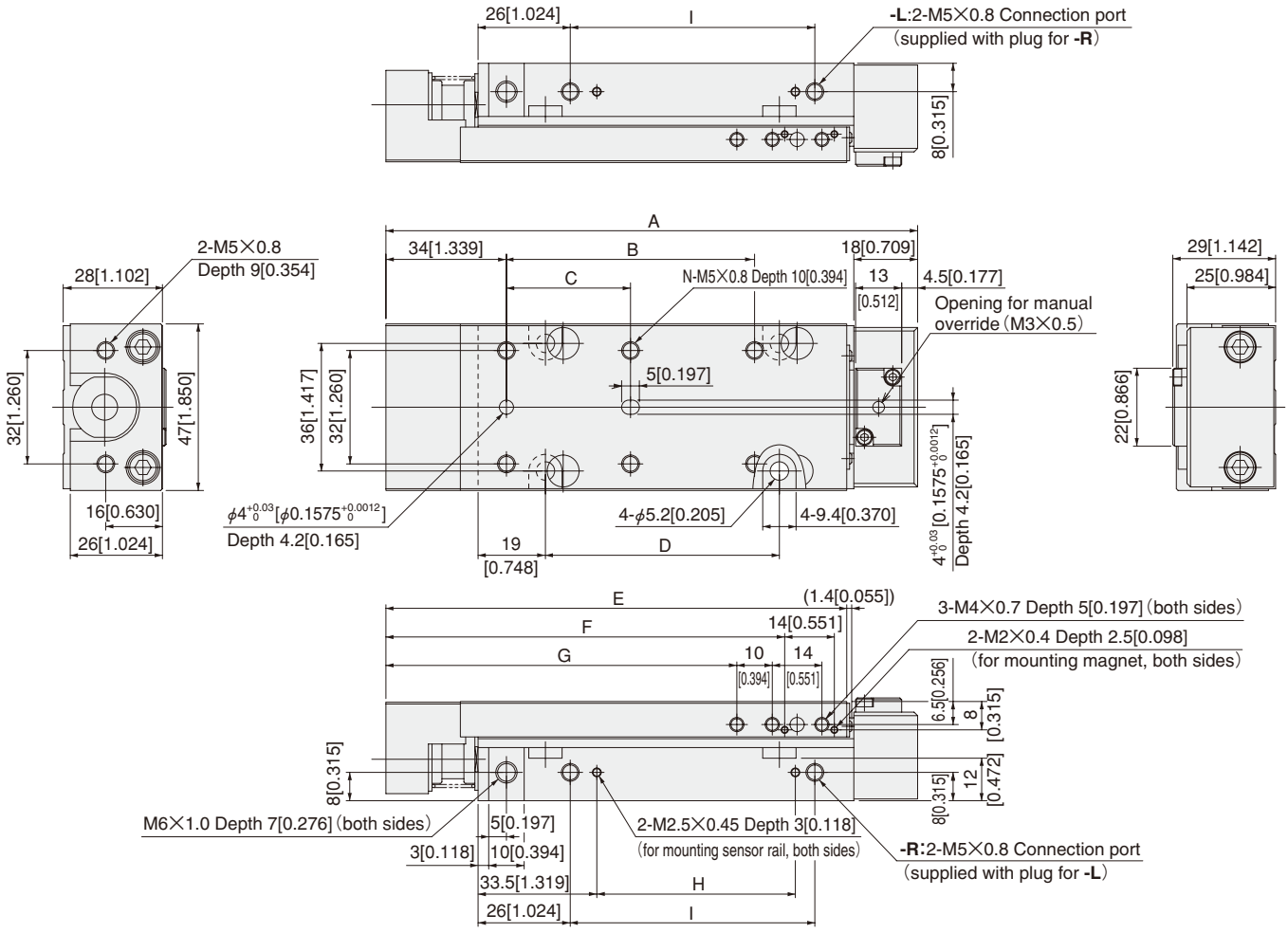

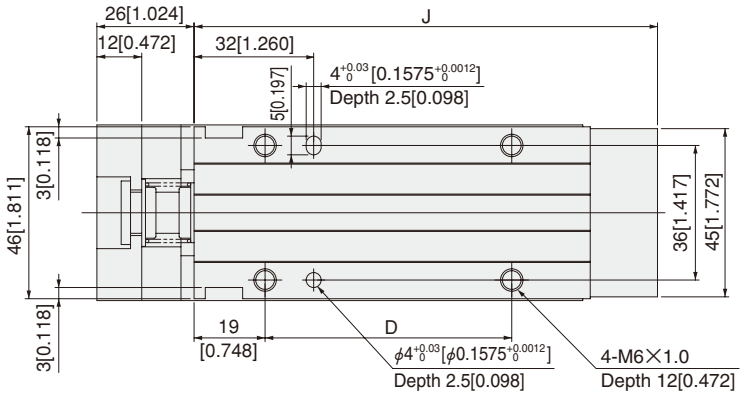

Locating pin: -P (P-MGA2)

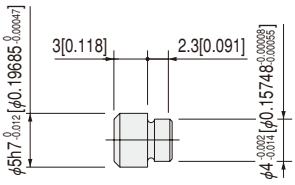

Stroke	A	B	C	D	E	F	G	H	I	J	K	N
10	110 [4.331]	—	30 [1.181]	26 [1.024]	90 [3.543]	72.5 [2.854]	59 [2.323]	16 [0.630]	29 [1.142]	84 [3.307]	46 [1.811]	4
20	110 [4.331]	—	30 [1.181]	26 [1.024]	90 [3.543]	72.5 [2.854]	59 [2.323]	16 [0.630]	29 [1.142]	84 [3.307]	46 [1.811]	4
30	130 [5.118]	—	50 [1.969]	46 [1.811]	110 [4.331]	92.5 [3.642]	79 [3.110]	36 [1.417]	49 [1.929]	104 [4.094]	66 [2.598]	4
40	130 [5.118]	—	50 [1.969]	46 [1.811]	110 [4.331]	92.5 [3.642]	79 [3.110]	36 [1.417]	49 [1.929]	104 [4.094]	66 [2.598]	4
50	150 [5.906]	70 [2.756]	35 [1.378]	66 [2.598]	130 [5.118]	112.5 [4.429]	99 [3.898]	56 [2.205]	69 [2.717]	124 [4.882]	86 [3.386]	6
60	150 [5.906]	70 [2.756]	35 [1.378]	66 [2.598]	130 [5.118]	112.5 [4.429]	99 [3.898]	56 [2.205]	69 [2.717]	124 [4.882]	86 [3.386]	6
70	170 [6.693]	90 [3.543]	45 [1.772]	86 [3.386]	150 [5.906]	132.5 [5.217]	119 [4.685]	76 [2.992]	89 [3.504]	144 [5.669]	106 [4.173]	6
80	170 [6.693]	90 [3.543]	45 [1.772]	86 [3.386]	150 [5.906]	132.5 [5.217]	119 [4.685]	76 [2.992]	89 [3.504]	144 [5.669]	106 [4.173]	6

Remark: The buffer stroke of ϕ20 [0.787] cylinder with buffer is a maximum of 6mm [0.236in.].

Dimensions of Bore Size ϕ20 [0.787] mm [in.]

●Cylinder with buffer end keep and magnet sensor rail MGAGKS20-SS

Piping direction: -R

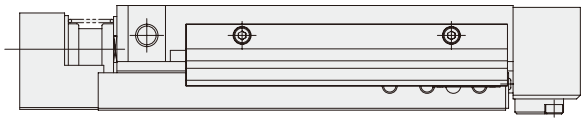

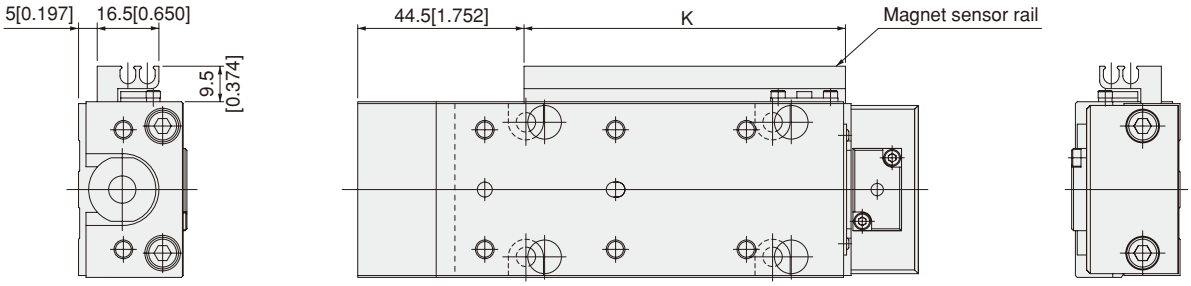

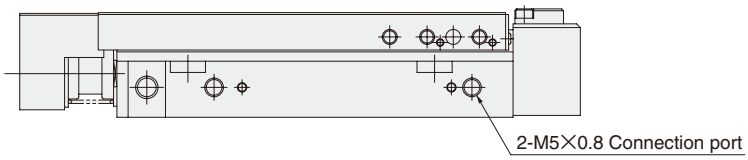

Piping direction: -L

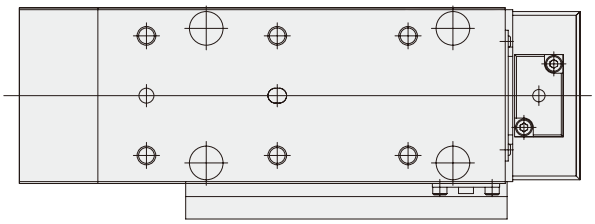

Locating pin: -P (P-MGA2)

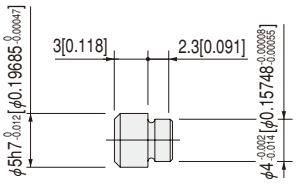

Remark: The buffer stroke of ϕ20 [0.787] cylinder with buffer is a maximum of 6mm [0.236in.].

Dimensions of Additional Parts mm [in.]

●Sensor rail

S-MGA1

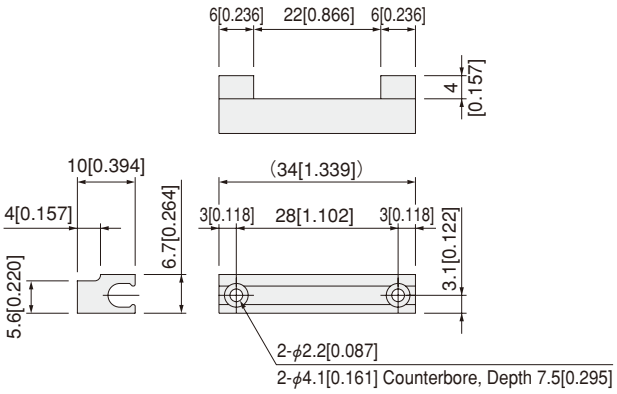

S-MGA2, 3, 4, 5

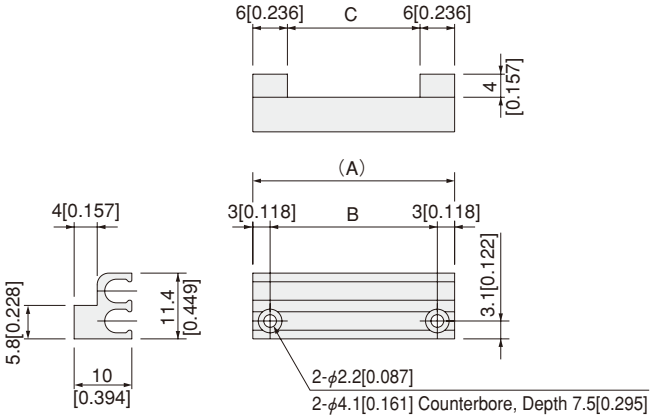

Model	A	B	C
S-MGA2	35 [1.378]	29 [1.142]	23 [0.906]
S-MGA3	40 [1.575]	34 [1.339]	28 [1.102]
S-MGA4	45 [1.772]	39 [1.535]	33 [1.299]
S-MGA5	55 [2.165]	49 [1.929]	43 [1.693]

S-MGA6, 7, 8, 9

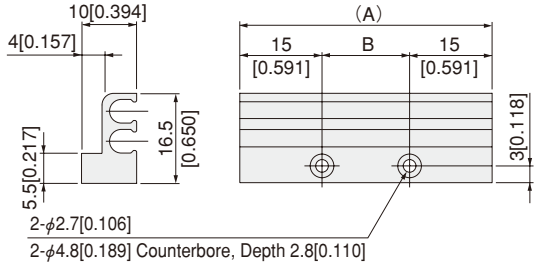

Model	A	B
S-MGA6	46 [1.811]	16 [0.630]
S-MGA7	66 [2.598]	36 [1.417]
S-MGA8	86 [3.386]	56 [2.205]
S-MGA9	106 [4.173]	76 [2.992]

●Rubber stopper

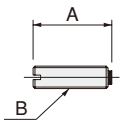

Model	A	B
CRK570	21 [0.827]	M6×0.75
CRK571	21 [0.827]	M8×0.75
CRK572	26 [1.024]	M10×1

●Metal stopper

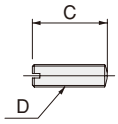

Model	C	D
CRK565	20 [0.787]	M6×0.75
CRK566	20 [0.787]	M8×0.75
CRK567	25 [0.984]	M10×1

●Magnet

M-MGA1

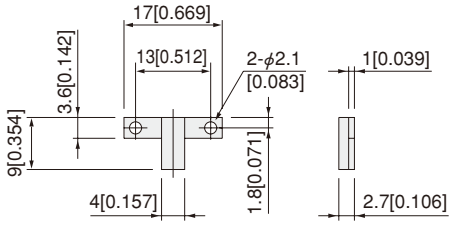

M-MGA2

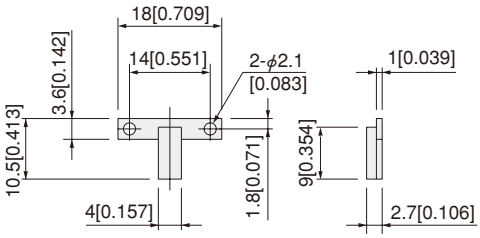

●Locating pin

P-MGA1

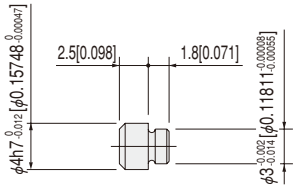

P-MGA2

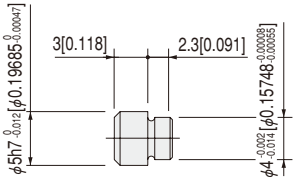

MINI GUIDE SLIDERS

Clean System Cylinders (cleanroom specification)

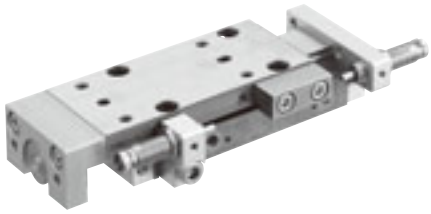

Symbol

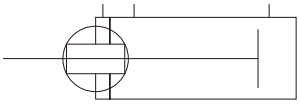

Specifications

Item / Model		CS-MGA□4.5	CS-MGA□6	CS-MGA□8	CS-MGA□10	CS-MGA□12	CS-MGA□16	CS-MGA□20
Bore size mm [in.]		4.5 [0.177]	6 [0.236]	8 [0.315]	10 [0.394]	12 [0.472]	16 [0.630]	20 [0.787]
Operation type		Double acting type						
Media		Air						
Operating pressure range MPa [psi.]		0.2～0.7 [29～102]		0.15～0.7 [22～102]		0.1～0.7 [15～102]		
Proof pressure MPa [psi.]		1.05 [152]						
Operating temperature range °C [°F]		0～60 [32～140]						
Operating speed range mm/s [in./sec.]		30～300 [1.2～12]				20～300 [0.8～12]		
Cushion	Standard	None	Rubber bumper					
	Optional	—				Shock absorber		
Port size		M3×0.5				M5×0.8		
Lubrication	Cylinder portion	Prohibited						
	Guide portion	Required (CGL grease Nippon Thompson Co., Ltd. made) Note 1						
Perpendicularity of end plate mm [in.]		0.1 [0.004]						
Stroke tolerance mm [in.]		$^{+1}_{0}$ [$^{+0.039}_{0}$]						
Repeatability Note 2 mm [in.]		—				±0.02 [±0.0008](Shock absorber)		
Stroke adjusting range Note 2 mm[in.]	Rubber stopper extended side	—				−9～0 [−0.354～0]	−8～0 [−0.315～0]	−8～0 [−0.315～0]
	Rubber stopper retracted side	—				−11～0 [−0.433～0]	−9～0 [−0.354～0]	−11～0 [−0.433～0]
	Shock absorber extended side	—				−12～0 [−0.472～0]	−13～0 [−0.512～0]	−22～0 [−0.866～0]
	Shock absorber retracted side	—				−14～0 [−0.551～0]	−14～0 [−0.551～0]	−25～0 [−0.984～0]
Allowable moment N・m[in・lbf]	Mp	0.24 [2.12]	0.28 [2.48]	0.28 [2.48]	0.28 [2.48]	1.5 [13.3]	2.1 [18.6]	2.5 [22.1]
	My	0.29 [2.57]	0.34 [3.01]	0.34 [3.01]	0.34 [3.01]	1.7 [15.0]	2.5 [22.1]	3.0 [26.6]
	Mr	0.22 [1.95]	0.23 [2.04]	0.38 [3.36]	0.38 [3.36]	2.6 [23.0]	4.3 [38.1]	4.8 [42.5]
Cleanliness Note 4		Class 5 or equivalent				Class 6 or equivalent Note 3		
Number of available sensor switches (optional)		1pc.	2pcs.					

Notes: 1. Apply grease on the raceway surface of the track rail in the guide portion every 6 months or 3 million operations.
2. For units with stroke adjusting mechanism.
3. With shock absorber type included.
4. Koganei standards

Cylinder Thrust

● Cylinder thrust is exactly the same as the standard cylinder. See p.604.

Bore Size and Stroke

mm [in.]

Bore size	Standard strokes
4.5 [0.177]	5Note, 10
6 [0.236]	5Note, 10, 15
8 [0.315]	5Note, 10, 15Note, 20
10 [0.395]	5Note, 10, 15Note, 20, 30
12 [0.472]	10Note, 20, 30Note, 40, 50Note, 60
16 [0.630]	10Note, 20, 30Note, 40, 50Note, 60
20 [0.787]	10Note, 20, 30Note, 40, 50Note, 60, 70Note, 80

Note: The collar packed is used in these strokes.

Order Codes

● ϕ 4.5 [0.177]～ ϕ 10[0.394]

CS - MGA [ ] [×] - [ ] - [ ] [ ] - [ ] [ ] [ ]

Clean system product

Mini guide slider

Magnet and sensor rail Note
Blank : No magnet and sensor rail
S : With magnet and sensor rail

Bore size
×
Stroke
●See the bore size and stroke on p.662.

Piping direction
R : Right side as viewed from the rod side
L : Left side as viewed from the rod side

Locating pin
Blank : No pin
P : With pin

Number of pins
1 : With 1 pin
2 : With 2 pins
3 : With 3 pins
4 : With 4 pins

Sensor switch type
Blank : No sensor switch
ZE135 : 2-lead wire, solid state type
ZE155 : 3-lead wire, solid state type
ZE235 : 2-lead wire, solid state type
ZE255 : 3-lead wire, solid state type
ZE101 : 2-lead wire, reed switch type
ZE102 : 2-lead wire, reed switch type
ZE201 : 2-lead wire, reed switch type
ZE202 : 2-lead wire, reed switch type
●For details of sensor switches, see p.1544.

Lead wire length
A : 1000mm [39in.]
B : 3000mm [118in.]

Number of sensor switches Note
1 : With 1 sensor switch
2 : With 2 sensor switches

Note: For a cylinder bore size of 4.5mm [0.177in.], the sensor rail has only 1 groove so that only 1 sensor switch can be mounted.

● ϕ 12 [0.472]～ ϕ 20[0.787]

CS - MGA [ ] [×] - [ ] - [ ] [ ] - [ ] [ ] - [ ] [ ] [ ]

Clean system product

Mini guide slider

Magnet and sensor rail
Blank : No magnet and sensor rail
S : With magnet and sensor rail

Bore size
×
Stroke
●See the bore size and stroke on p.662.

Piping direction
R : Right side as viewed from the rod side
L : Left side as viewed from the rod side

Stroke adjusting mechanism
Blank : No stroke adjusting mechanism
RS : With rubber stopper
SS : With shock absorber

Stroke adjusting position
Blank: No stroke adjustment
2 : Both ends (with 2 stroke adjustments)
F : Extended end (with 1 stroke adjustment)
R : Retracted end (with 1 stroke adjustment)

Locating pin
Blank : No pin
P : With pin

Number of pins
1 : With 1 pin
2 : With 2 pins
3 : With 3 pins
4 : With 4 pins

Sensor switch type
Blank : No sensor switch
ZE135 : 2-lead wire, solid state type
ZE155 : 3-lead wire, solid state type
ZE235 : 2-lead wire, solid state type
ZE255 : 3-lead wire, solid state type
ZE101 : 2-lead wire, reed switch type
ZE102 : 2-lead wire, reed switch type
ZE201 : 2-lead wire, reed switch type
ZE202 : 2-lead wire, reed switch type
●For details of sensor switches, see p.1544.

Lead wire length
A : 1000mm [39in.]
B : 3000mm [118in.]

Number of sensor switches
1 : With 1 sensor switch
2 : With 2 sensor switches

●Mini Guide Sliders ϕ 12, 16, 20 [ϕ0.472, 0.630, 0.787] Product Range and Optional Combinations

Model	Type	Rubber stopper			Shock absorber		
		Extended end -RSF	Retracted end -RSR	Both ends -RS2	Extended end -SSF	Retracted end -SSR	Both ends -SS2
CS-MGA12, 16, 20	Clean system cylinder	●	●	●	●	●	●

■Additional Parts

● The sensor rail, magnet, and locating pin are the same as the standard cylinder. See p.606.
Remark: For the dimensions of additional parts, see p.661. Also, for the dimensions of the shock absorber unit, see the General Catalog of Air Treatment, Auxiliary, Vacuum.

●Stopper and shock absorber

Bore size	Rubber stopper type	Shock absorber model
12 [0.472in.]	**CRK570**	**CS-KSHC4×4-BD**
16 [0.630in.]	**CRK571**	**CS-KSHC5×5-DE**
20 [0.787in.]	**CRK572**	**CS-KSHC6×8-DE**

Remark: The set includes a mounting nut.

Rubber stopper

Shock absorber

Mass

● ϕ 4.5 [0.177]～ ϕ 10[0.394]

g [oz.]

Model	Stroke mm	No magnet and sensor rail	With magnet and sensor rail	Additional mass Sensor switch (1 pc.) ZE□□□A	Additional mass Sensor switch (1 pc.) ZE□□□B
CS-MGA□4.5	5	45 [1.59]	49 [1.73]	15 [0.53]	35 [1.23]
	10	45 [1.59]	49 [1.73]		
CS-MGA□6	5	61 [2.15]	66 [2.33]	15 [0.53]	35 [1.23]
	10	61 [2.15]	66 [2.33]		
	15	69 [2.43]	75 [2.65]		
CS-MGA□8	5	87 [3.07]	92 [3.25]	15 [0.53]	35 [1.23]
	10	87 [3.07]	92 [3.25]		
	15	108 [3.81]	114 [4.02]		
	20	108 [3.81]	114 [4.02]		
CS-MGA□10	5	109 [3.84]	114 [4.02]	15 [0.53]	35 [1.23]
	10	109 [3.84]	114 [4.02]		
	15	136 [4.80]	142 [5.01]		
	20	136 [4.80]	142 [5.01]		
	30	163 [5.75]	170 [6.00]		

● ϕ 12 [0.472]～ ϕ 20[0.787]

g [oz.]

Model	Stroke mm	Body mass	Additional mass: With magnet and sensor rail	Stroke adjusting bracket -□S2	Stroke adjusting bracket -□SF	Stroke adjusting bracket -□SR	Rubber stopper (1 pc.)	Shock absorber (1 pc.)	Sensor switch (1 pc.) ZE□□□A	Sensor switch (1 pc.) ZE□□□B
CS-MGA□12	10	224 [7.90]	12 [0.42]	31 [1.09]	19 [0.67]	27 [0.95]	4 [0.14]	5 [0.18]	15 [0.53]	35 [1.23]
	20	224 [7.90]	12 [0.42]	27 [0.95]	15 [0.53]	23 [0.81]				
	30	296 [10.44]	17 [0.60]	31 [1.09]	19 [0.67]	27 [0.95]				
	40	296 [10.44]	17 [0.60]	27 [0.95]	15 [0.53]	23 [0.81]				
	50	368 [12.98]	22 [0.78]	31 [1.09]	19 [0.67]	27 [0.95]				
	60	368 [12.98]	22 [0.78]	27 [0.95]	15 [0.53]	23 [0.81]				
CS-MGA□16	10	347 [12.24]	12 [0.42]	60 [2.12]	35 [1.23]	52 [1.83]	8 [0.28]	10 [0.35]	15 [0.53]	35 [1.23]
	20	347 [12.24]	12 [0.42]	53 [1.87]	28 [0.99]	45 [1.59]				
	30	450 [15.87]	17 [0.60]	60 [2.12]	35 [1.23]	52 [1.83]				
	40	450 [15.87]	17 [0.60]	53 [1.87]	28 [0.99]	45 [1.59]				
	50	553 [19.51]	22 [0.78]	60 [2.12]	35 [1.23]	52 [1.83]				
	60	553 [19.51]	22 [0.78]	53 [1.87]	28 [0.99]	45 [1.59]				
CS-MGA□20	10	542 [19.12]	12 [0.42]	74 [2.61]	40 [1.41]	60 [2.12]	15 [0.53]	21 [0.74]	15 [0.53]	35 [1.23]
	20	542 [19.12]	12 [0.42]	67 [2.36]	33 [1.16]	53 [1.87]				
	30	686 [24.20]	17 [0.60]	74 [2.61]	40 [1.41]	60 [2.12]				
	40	686 [24.20]	17 [0.60]	67 [2.36]	33 [1.16]	53 [1.87]				
	50	830 [29.28]	22 [0.78]	74 [2.61]	40 [1.41]	60 [2.12]				
	60	830 [29.28]	22 [0.78]	67 [2.36]	33 [1.16]	53 [1.87]				
	70	974 [34.36]	27 [0.95]	74 [2.61]	40 [1.41]	60 [2.12]				
	80	974 [34.36]	27 [0.95]	67 [2.36]	33 [1.16]	53 [1.87]				

Inner Construction

CS-MGA□4.5

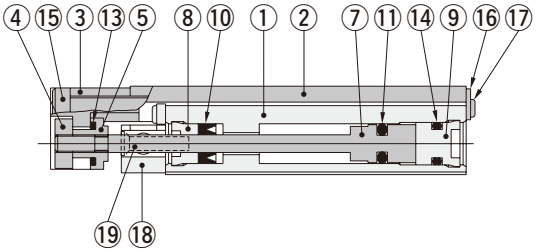

CS-MGA□6, 8

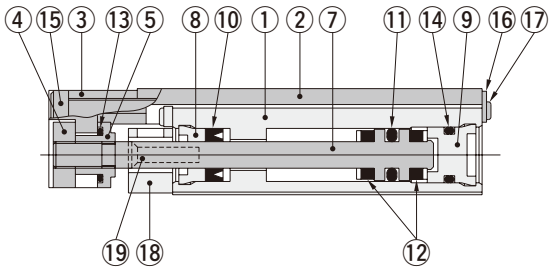

CS-MGA□10～□20

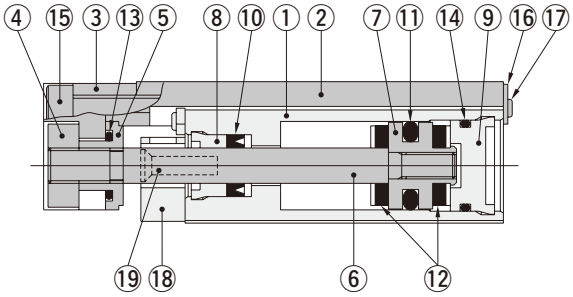

CS-MGAS□(With magnet and sensor rail)

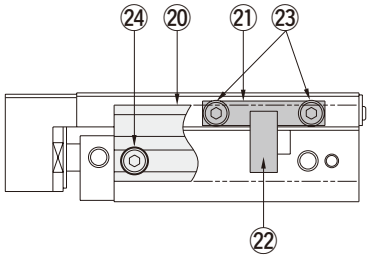

Locating pin

CS-MGA□12～□20 (With shock absorber)

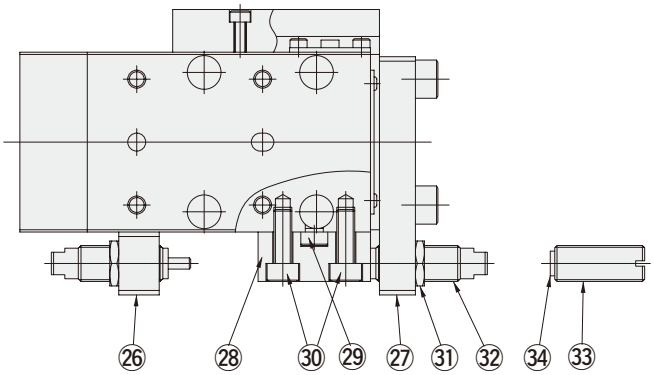

Major Parts and Materials

No.	Model / Parts	CS-MGA□4.5	CS-MGA□6	CS-MGA□8	CS-MGA□10～□20
①	Body	Stainless steel (heat treated)			
②	Table	Stainless steel (heat treated)			
③	Plate	Aluminum alloy (special wear-resistant treatment)			
④	Nut A	Stainless steel			
⑤	Nut B	Stainless steel			
⑥	Piston rod	—			Stainless steel
⑦	Piston Note	Stainless steel			Al alloy (special rust prevention treatment)
⑧	Rod cap	Oil impregnated plastic bushing (polyacetal)			
⑨	Head cap	Plastic			
⑩	Rod seal	Synthetic rubber (NBR)			
⑪	Piston seal	Synthetic rubber (NBR)			
⑫	Bumper	—	Synthetic rubber (urethane)		
⑬	O-ring	Synthetic rubber (NBR)			
⑭	O-ring	Synthetic rubber (NBR)			
⑮	Bolt	Stainless steel			
⑯	Holder plate	Stainless steel			
⑰	Screw	Stainless steel			
⑱	Dust collection block	Aluminum alloy (anodized)			
⑲	Screw	Stainless steel			
⑳	Sensor rail	Aluminum alloy (anodized)			
㉑	Magnet holder	Aluminum alloy (anodized)			
㉒	Magnet	Plastic magnet			
㉓	Bolt	Stainless steel			
㉔	Bolt	Stainless steel			
㉕	Locating pin	Steel (heat treated)			

No.	Model / Parts	CS-MGA□12～□20
㉖	Bracket A	Aluminum alloy (anodized)
㉗	Bracket B	Aluminum alloy (anodized)
㉘	Stopper	Steel (heat treatment and nickel plated)
㉙	Locating pin	Steel (heat treated)
㉚	Bolt	Stainless steel
㉛	Nut	Mild steel (nickel plated)
㉜	Shock absorber	—
㉝	Adjusting bolt	Steel (nickel plated)
㉞	Bumper	Synthetic rubber (NBR)

Note: In **CS-MGA□4.5, CS-MGA□6** and **CS-MGA□8**, a piston and piston rod are combined as single-piece construction.

Evaluations of Cleanliness

There is currently no standard in JIS or elsewhere for methods of evaluating cleanliness for pneumatic equipment in the cleanroom specification. Koganei has therefore independently established our in-house measurement methods, to conduct the cleanliness evaluation.

The number of particles generated by the Mini Guide Slider Cleanroom Specification is measured as shown in the method below.

1. Measurement sample

①CS-MGA10×10(no load) ②CS-MGA20×60-SS2 (load: 2.5kg[5.5lbf.])

2. Measurement conditions

2-1 Test circuit : with suction from dust collection port

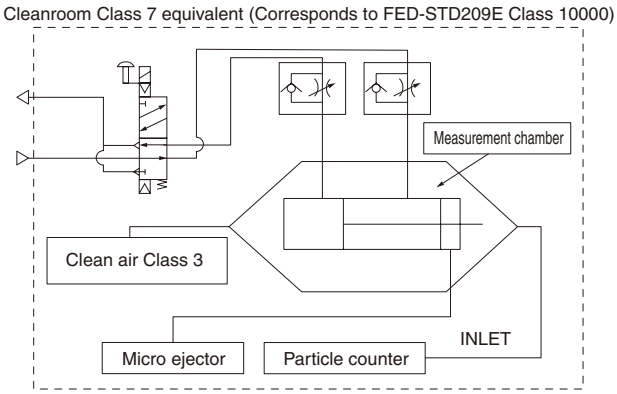

2-2 Operating conditions of the tested cylinder
Operating frequency: CS-MGA10/1Hz, CS-MGA20/0.5Hz
Average speed: 300mm/s [12in./sec.]
Applied pressure: 0.5MPa [73psi.]
Suction condition: Microejector ME05, Primary side 0.5MPa [73psi.] applied, Tube ϕ6 [0.236in.]
Mounting direction: CS-MGA10/Vertical, CS-MGA20/Horizontal
Chamber volume: 8.3 ℓ [0.293ft.^{3}]

3. Particle counter

Manufacturer/model: RION/KM20
Suction flow rate: 28.3 ℓ/min [1ft.^{3}/min.]
Particle diameter: 0.1 μm, 0.2 μm, 0.3 μm, 0.5 μm, 0.7 μm, 1.0 μm

4. Measurement method

4-1 Confirmation of number of particles in the measurement system
Under the conditions in the above 1 and 2, using a particle counter to measure the sample for 9 minutes without operating the measurement sample, and confirmed the measured number of particle is 1 piece or less.

4-2 Measurement under operation
Under the conditions in the above 1 and 2, operating the measurement sample for 36 minutes, and measured the total values in the latter half of 18 minutes test.

4-3 Reconfirmation
Performed the measurement in 4-1 again, to reconfirm the number of particles in the measurement system.

4-4 Measurement value conversion
Total value of last 18 minutes of 4-2 converted into number per 10 cylinder operations.

5. Measurement results Note

●With suction from dust collection port

① CS-MGA10×10

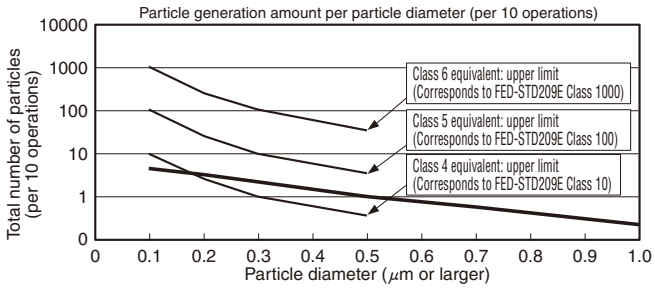

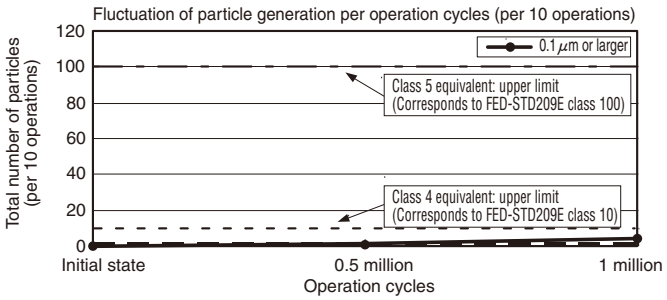

② CS-MGA20×60-SS2

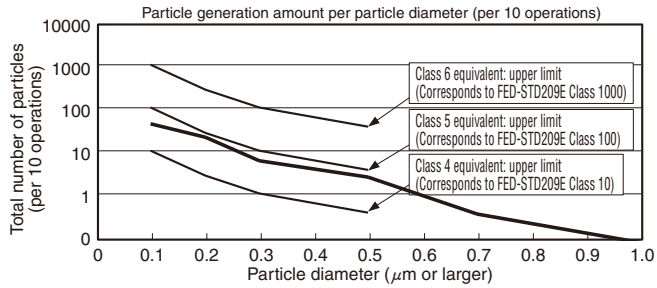

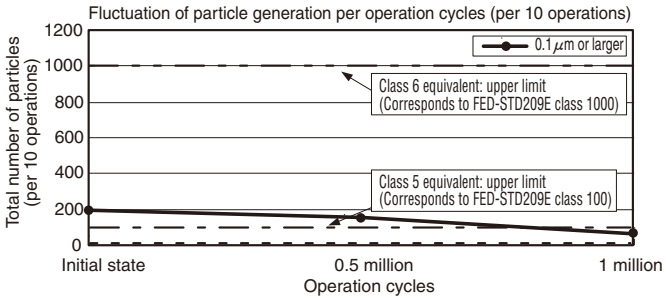

Note: The graphs by particle diameter are based on measurements after 1 million operations of products.

CS-MGA□4.5

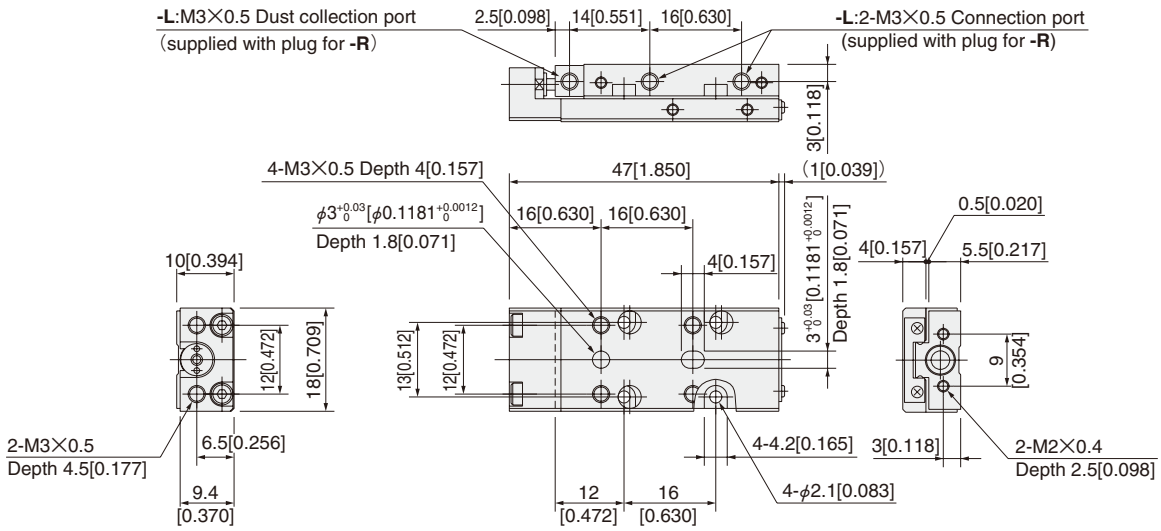

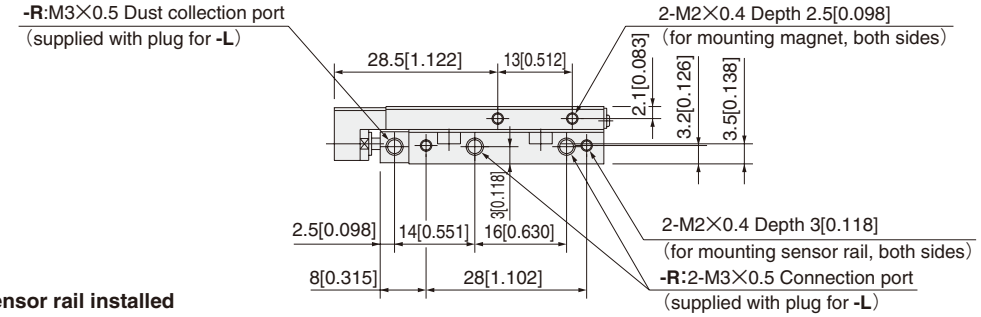

In the case of magnet and sensor rail installed (Piping direction: -R)

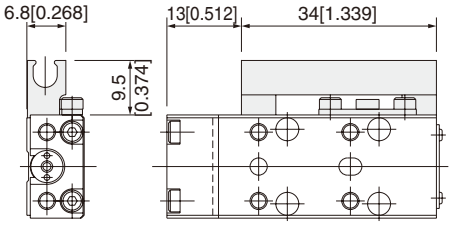

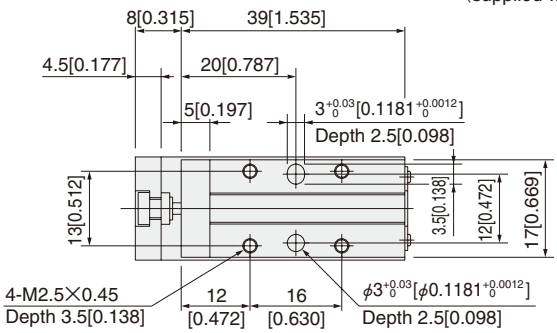

In the case of magnet and sensor rail installed (Piping direction: -L)

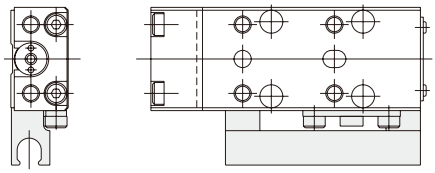

Locating pin: -P (P-MGA1)

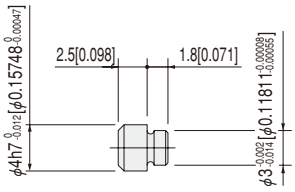

Dimensions of Clean System Cylinders mm [in.]

CS-MGA□6

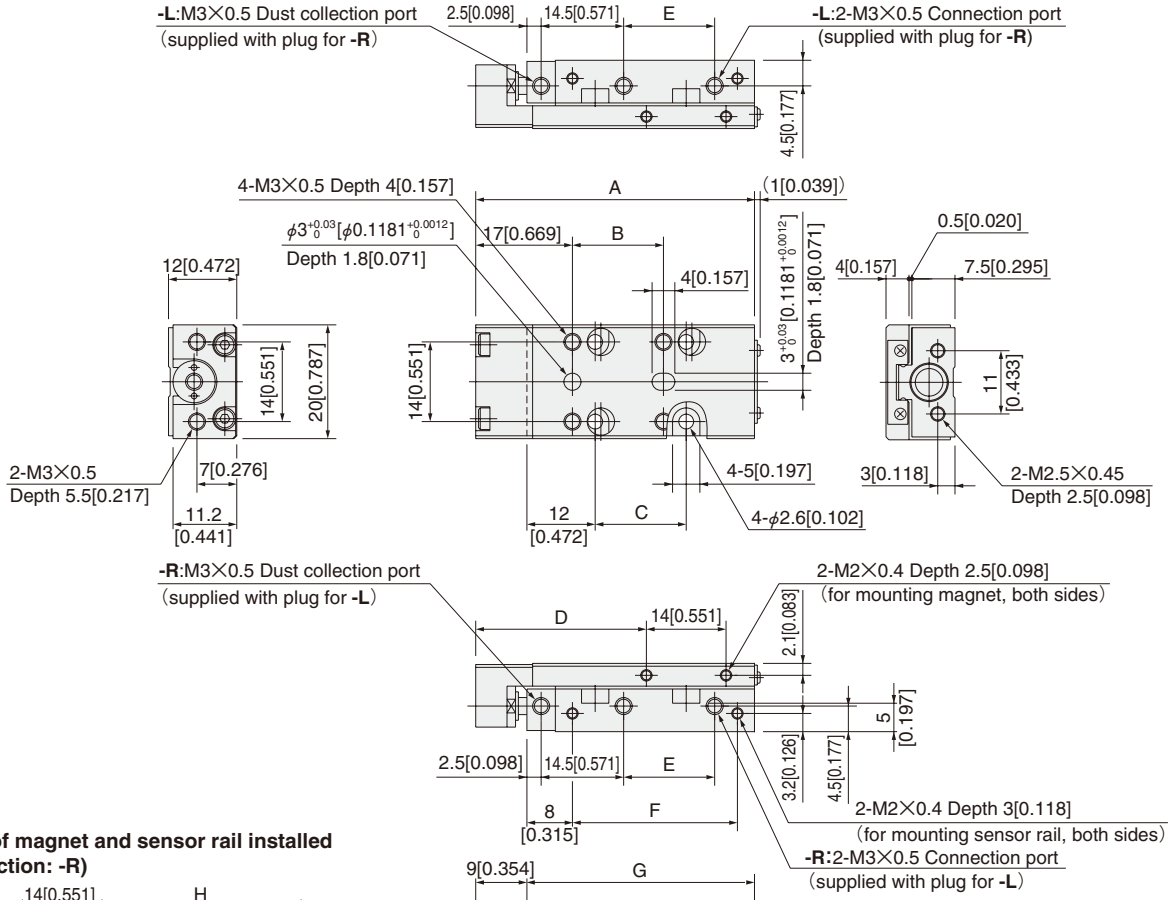

In the case of magnet and sensor rail installed (Piping direction: -R)

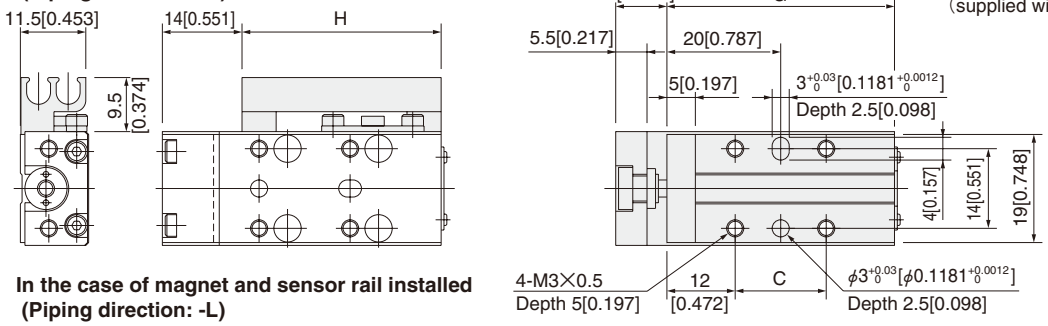

In the case of magnet and sensor rail installed (Piping direction: -L)

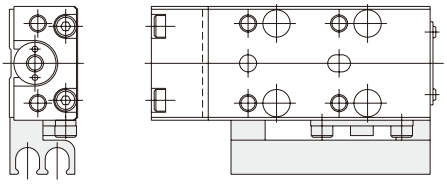

Locating pin: -P (P-MGA1)

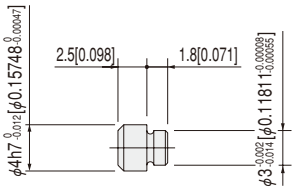

Stroke	A	B	C	D	E	F	G	H
5	49 [1.929]	16 [0.630]	16 [0.630]	30 [1.181]	16 [0.630]	29 [1.142]	40 [1.575]	35 [1.378]
10	49 [1.929]	16 [0.630]	16 [0.630]	30 [1.181]	16 [0.630]	29 [1.142]	40 [1.575]	35 [1.378]
15	54 [2.126]	21 [0.827]	21 [0.827]	35 [1.378]	21 [0.827]	34 [1.339]	45 [1.772]	40 [1.575]

Dimensions of Clean System Cylinders mm [in.]

CS-MGA□8

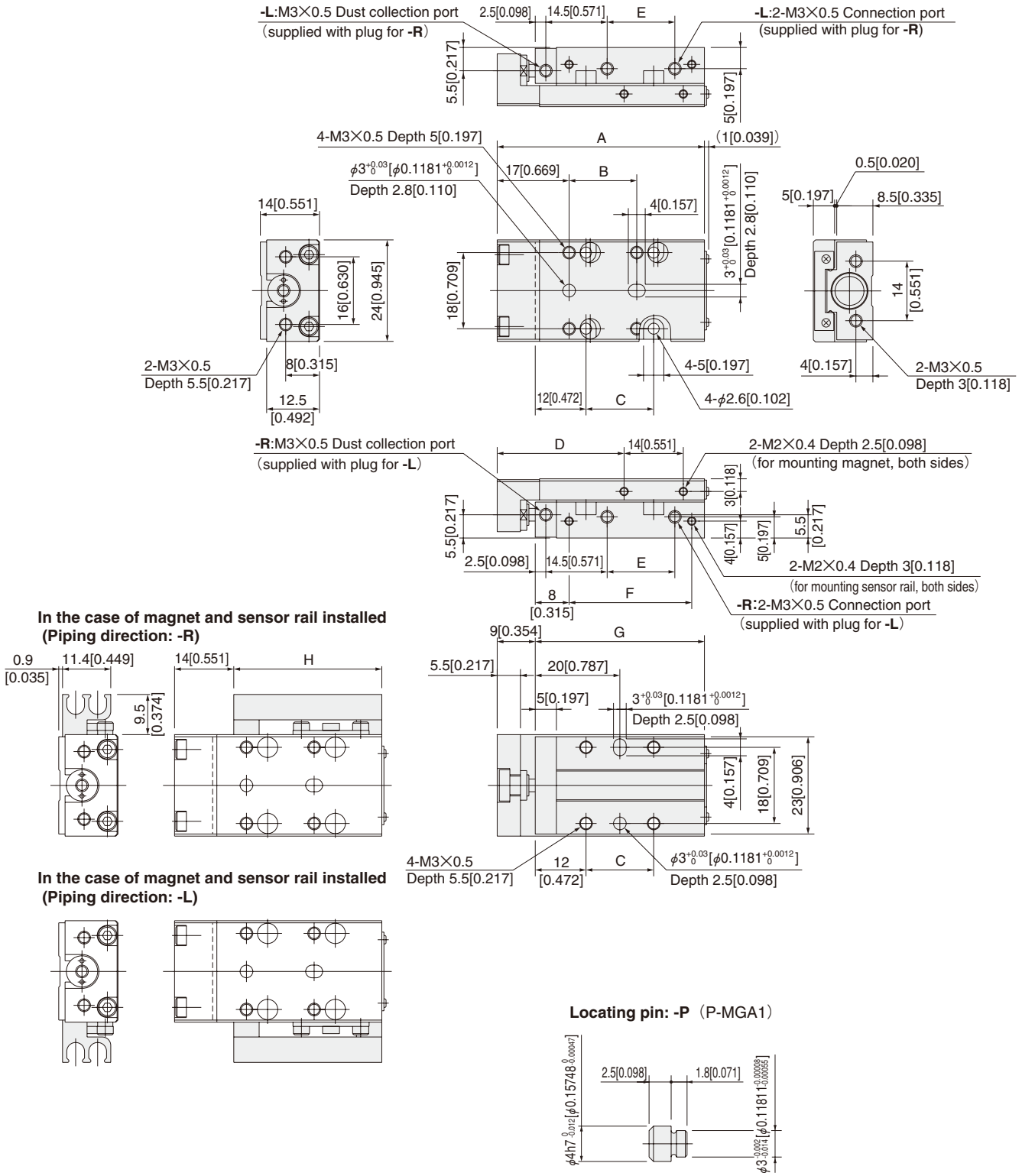

Stroke	A	B	C	D	E	F	G	H
5	49 [1.929]	16 [0.630]	16 [0.630]	30 [1.181]	16 [0.630]	29 [1.142]	40 [1.575]	35 [1.378]
10	49 [1.929]	16 [0.630]	16 [0.630]	30 [1.181]	16 [0.630]	29 [1.142]	40 [1.575]	35 [1.378]
15	59 [2.323]	26 [1.024]	26 [1.024]	40 [1.575]	26 [1.024]	39 [1.535]	50 [1.969]	45 [1.772]
20	59 [2.323]	26 [1.024]	26 [1.024]	40 [1.575]	26 [1.024]	39 [1.535]	50 [1.969]	45 [1.772]

Dimensions of Clean System Cylinders mm [in.]

CS-MGA□10

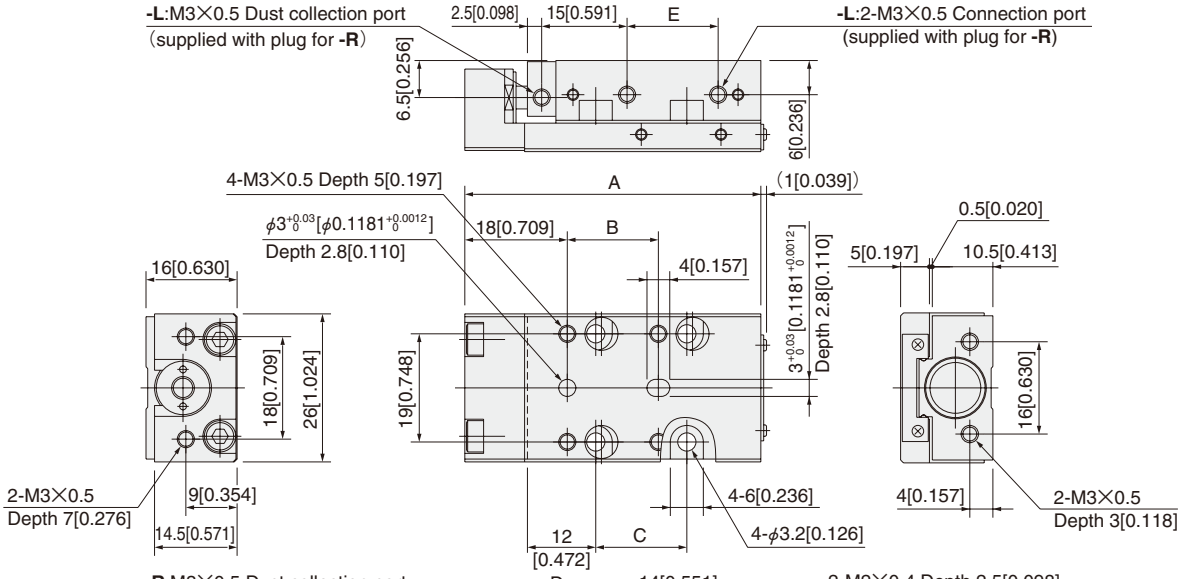

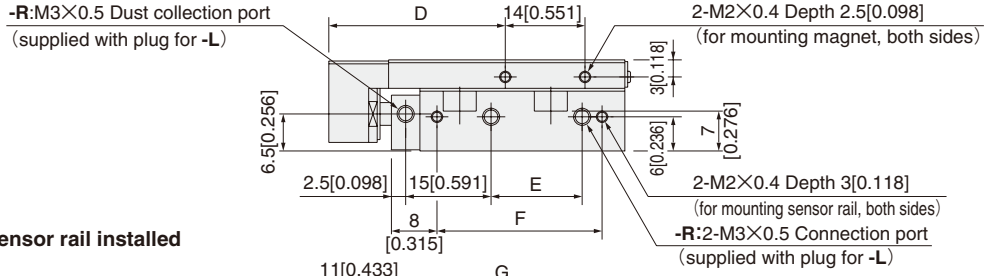

In the case of magnet and sensor rail installed (Piping direction: -R)

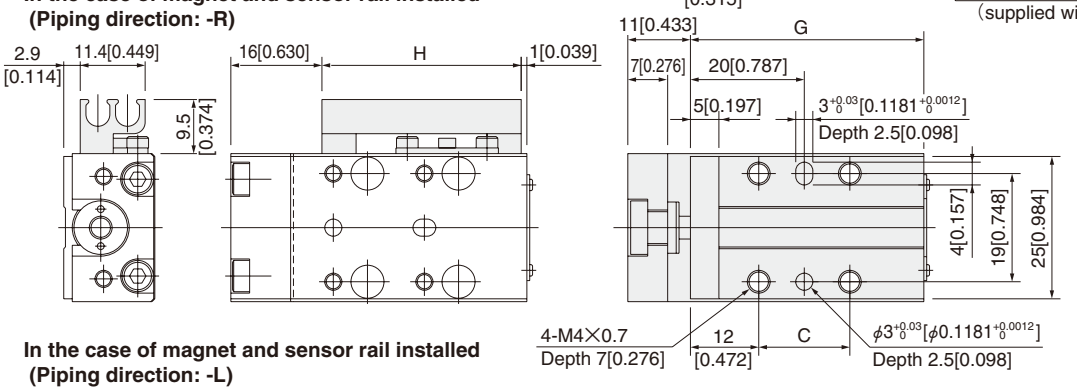

In the case of magnet and sensor rail installed (Piping direction: -L)

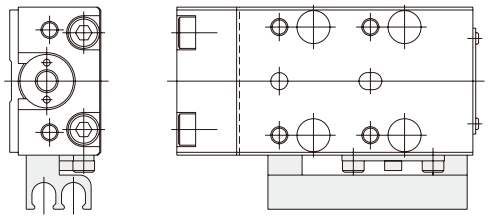

Locating pin: -P (P-MGA1)

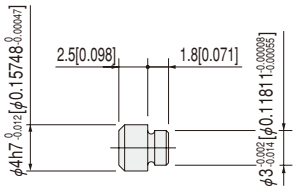

Stroke	A	B	C	D	E	F	G	H
5	52 [2.047]	16 [0.630]	16 [0.630]	31 [1.220]	16 [0.630]	29 [1.142]	41 [1.614]	35 [1.378]
10	52 [2.047]	16 [0.630]	16 [0.630]	31 [1.220]	16 [0.630]	29 [1.142]	41 [1.614]	35 [1.378]
15	62 [2.441]	26 [1.024]	26 [1.024]	41 [1.614]	26 [1.024]	39 [1.535]	51 [2.008]	45 [1.772]
20	62 [2.441]	26 [1.024]	26 [1.024]	41 [1.614]	26 [1.024]	39 [1.535]	51 [2.008]	45 [1.772]
30	72 [2.835]	36 [1.417]	36 [1.417]	51 [2.008]	36 [1.417]	49 [1.929]	61 [2.402]	55 [2.165]

Remark: For cylinder with magnet sensor rail, see p.672.

CS-MGA12

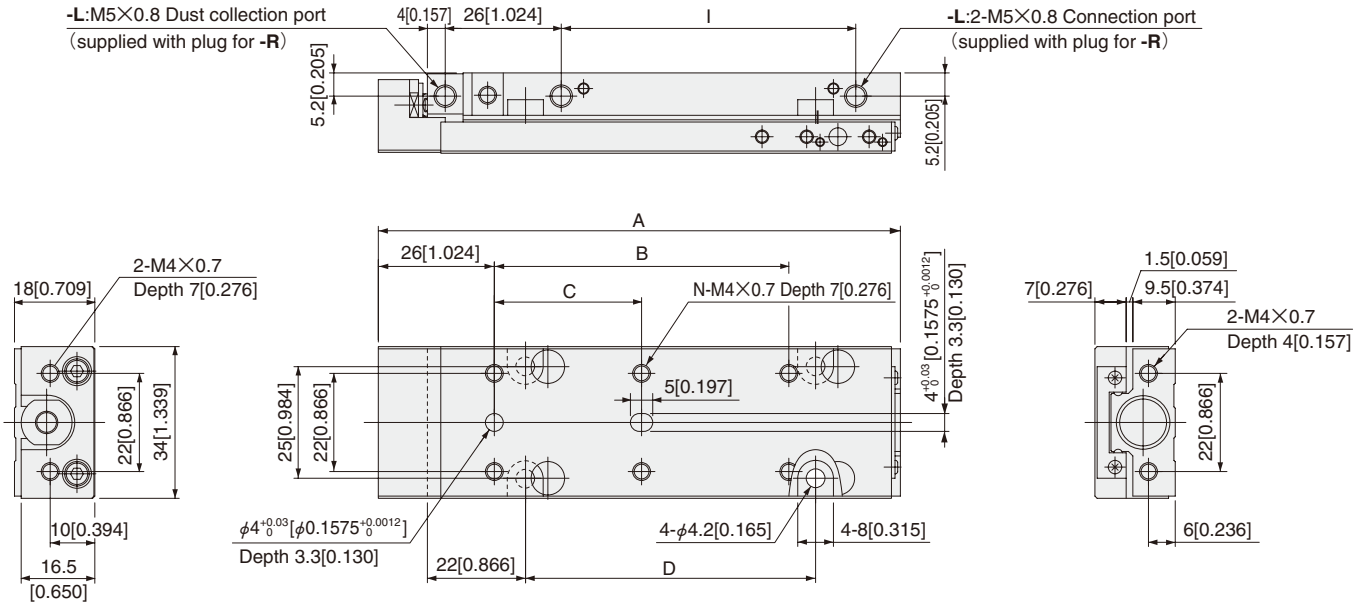

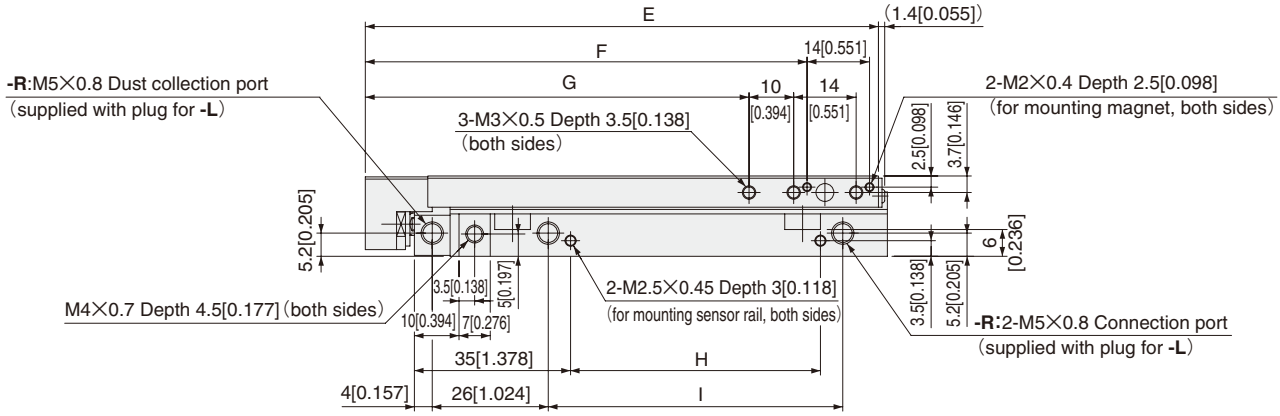

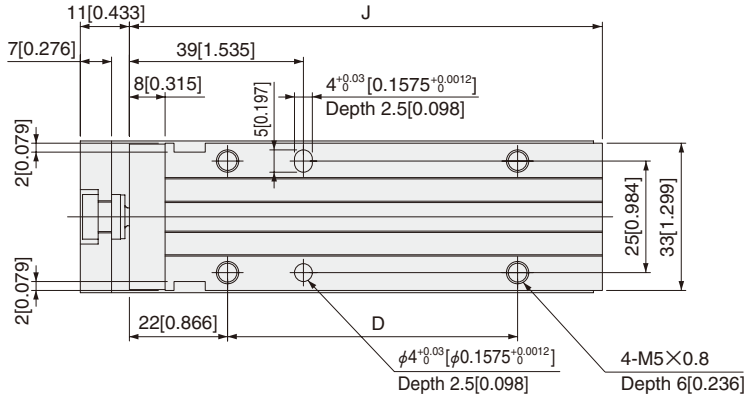

Locating pin: -P (P-MGA2)

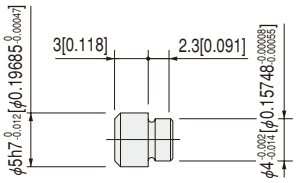

Stroke	A	B	C	D	E	F	G	H	I	J	K	N
10	77 [3.031]	—	26 [1.024]	25 [0.984]	75 [2.953]	59 [2.323]	46 [1.811]	16 [0.630]	26 [1.024]	66 [2.598]	46 [1.811]	4
20	77 [3.031]	—	26 [1.024]	25 [0.984]	75 [2.953]	59 [2.323]	46 [1.811]	16 [0.630]	26 [1.024]	66 [2.598]	46 [1.811]	4
30	97 [3.819]	—	46 [1.811]	45 [1.772]	95 [3.740]	79 [3.110]	66 [2.598]	36 [1.417]	46 [1.811]	86 [3.386]	66 [2.598]	4
40	97 [3.819]	—	46 [1.811]	45 [1.772]	95 [3.740]	79 [3.110]	66 [2.598]	36 [1.417]	46 [1.811]	86 [3.386]	66 [2.598]	4
50	117 [4.606]	66 [2.598]	33 [1.299]	65 [2.559]	115 [4.528]	99 [3.898]	86 [3.386]	56 [2.205]	66 [2.598]	106 [4.173]	86 [3.386]	6
60	117 [4.606]	66 [2.598]	33 [1.299]	65 [2.559]	115 [4.528]	99 [3.898]	86 [3.386]	56 [2.205]	66 [2.598]	106 [4.173]	86 [3.386]	6

Dimensions of Clean System Cylinders mm [in.]

●Cylinder with magnet sensor rail CS-MGAS12
●Cylinder with shock absorber CS-MGA□12-SS□

Piping direction: -R

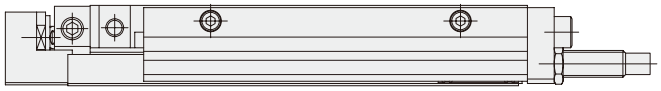

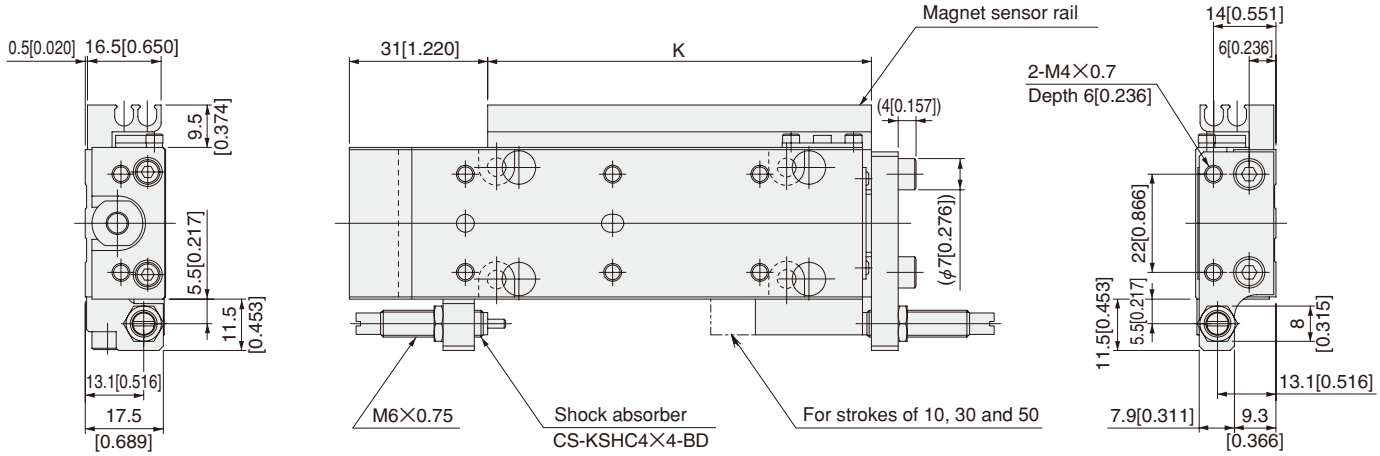

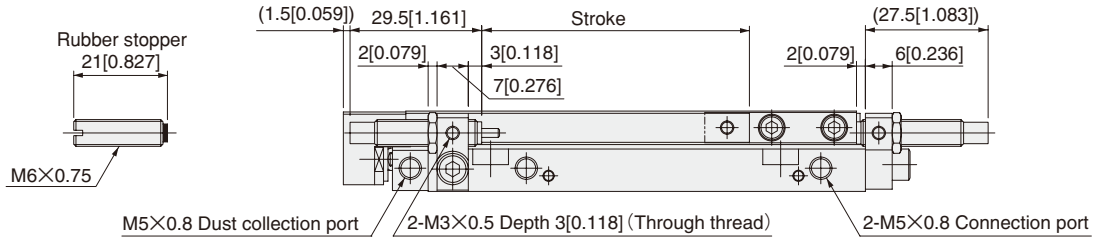

Note: For locking the rubber stopper or metal stopper.
Should never be used for securing the shock absorber.

Piping direction: -L

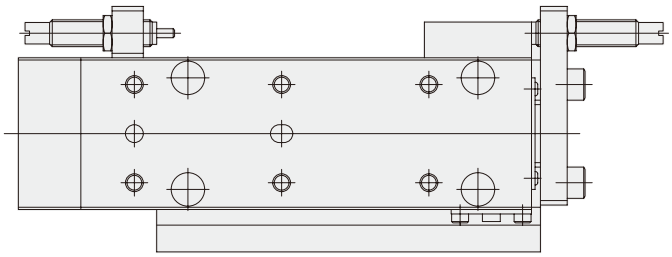

Locating pin: -P (P-MGA2)

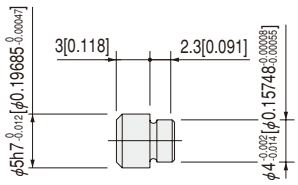

Remark: For cylinder with magnet sensor rail, see p.674.

CS-MGA16

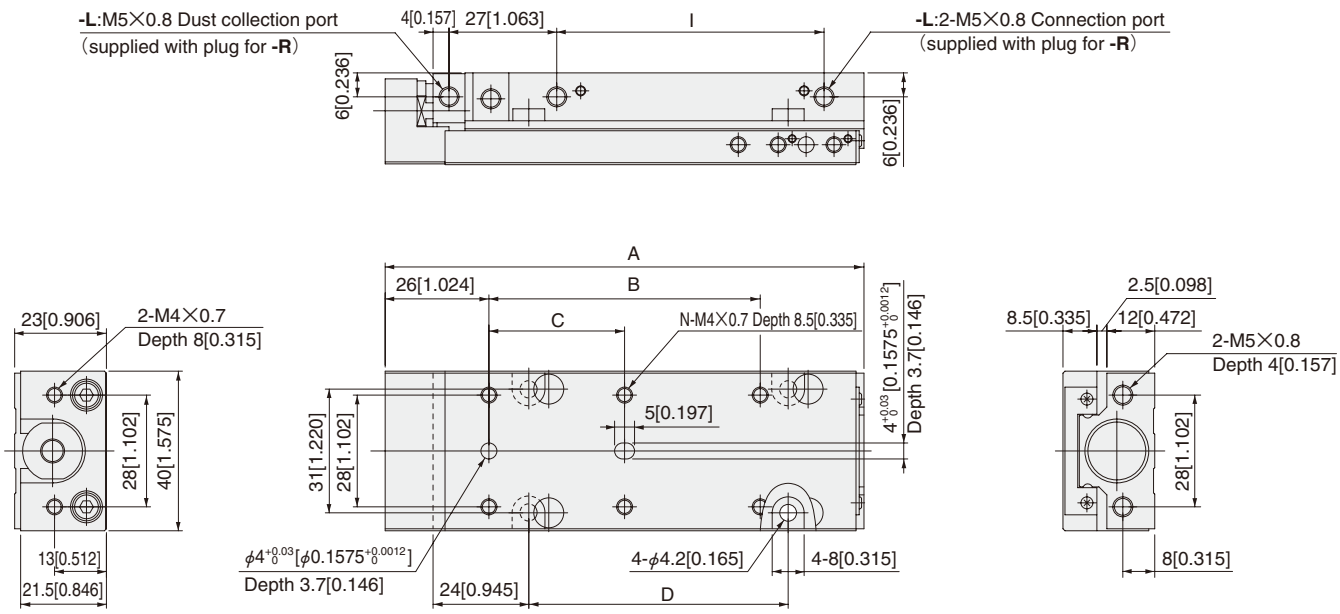

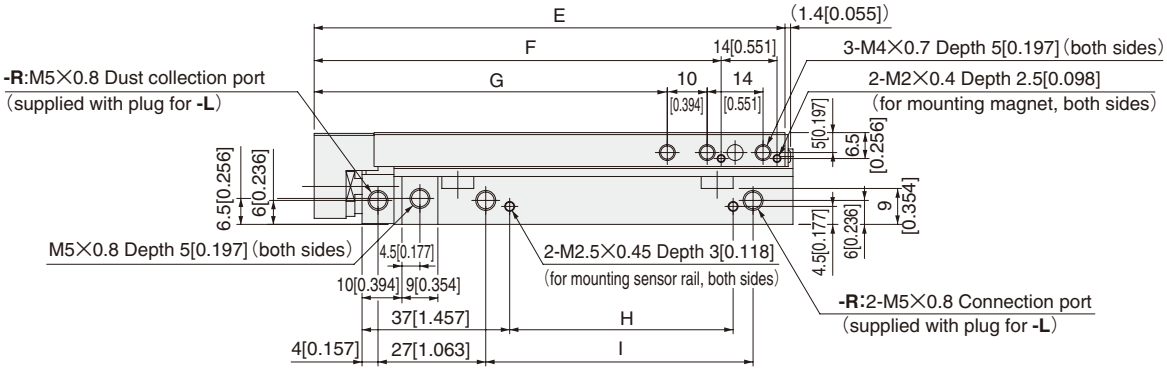

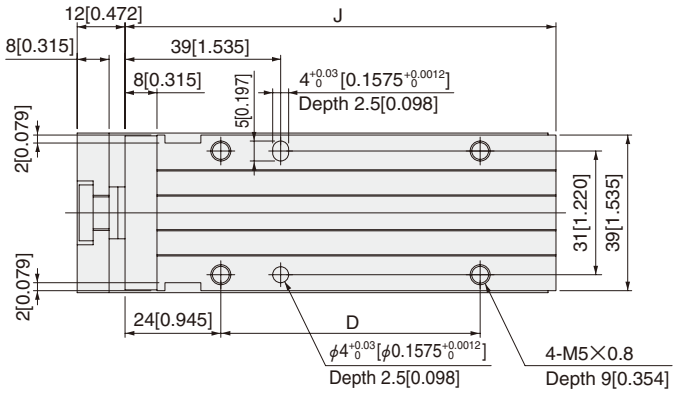

Locating pin: -P (P-MGA2)

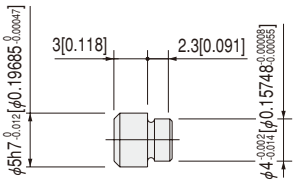

Stroke	A	B	C	D	E	F	G	H	I	J	K	N
10	80 [3.150]	—	28 [1.102]	25 [0.984]	78 [3.071]	62 [2.441]	48.5 [1.909]	16 [0.630]	27 [1.063]	68 [2.677]	46 [1.811]	4
20	80 [3.150]	—	28 [1.102]	25 [0.984]	78 [3.071]	62 [2.441]	48.5 [1.909]	16 [0.630]	27 [1.063]	68 [2.677]	46 [1.811]	4
30	100 [3.937]	—	48 [1.890]	45 [1.772]	98 [3.858]	82 [3.228]	68.5 [2.697]	36 [1.417]	47 [1.850]	88 [3.465]	66 [2.598]	4
40	100 [3.937]	—	48 [1.890]	45 [1.772]	98 [3.858]	82 [3.228]	68.5 [2.697]	36 [1.417]	47 [1.850]	88 [3.465]	66 [2.598]	4
50	120 [4.724]	68 [2.677]	34 [1.339]	65 [2.559]	118 [4.646]	102 [4.016]	88.5 [3.484]	56 [2.205]	67 [2.638]	108 [4.252]	86 [3.386]	6
60	120 [4.724]	68 [2.677]	34 [1.339]	65 [2.559]	118 [4.646]	102 [4.016]	88.5 [3.484]	56 [2.205]	67 [2.638]	108 [4.252]	86 [3.386]	6

Dimensions of Clean System Cylinders mm [in.]

●Cylinder with magnet sensor rail CS-MGAS16
●Cylinder with shock absorber CS-MGA□16-SS□

Piping direction: -R

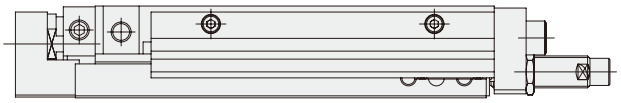

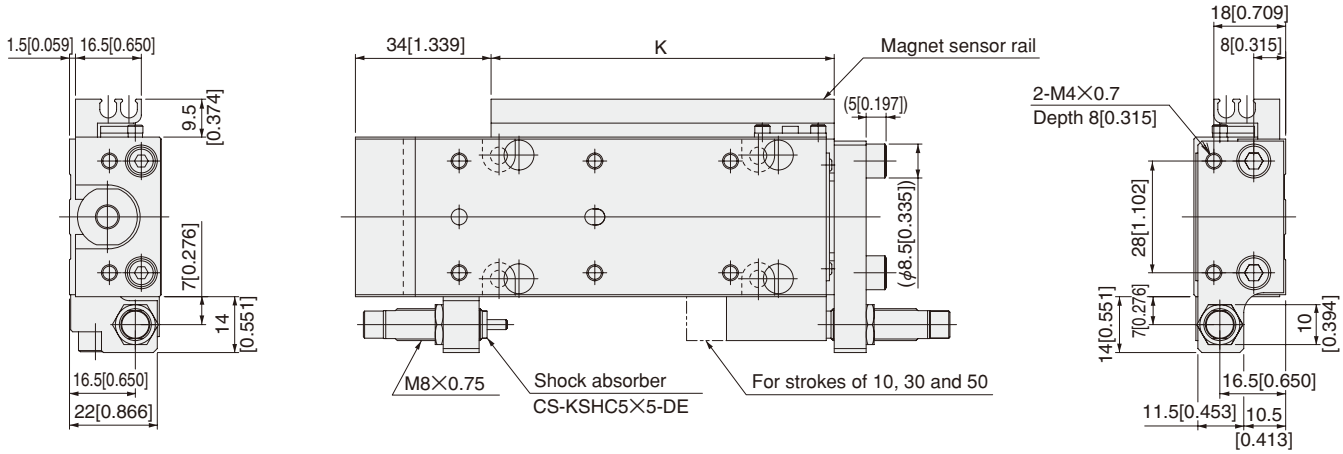

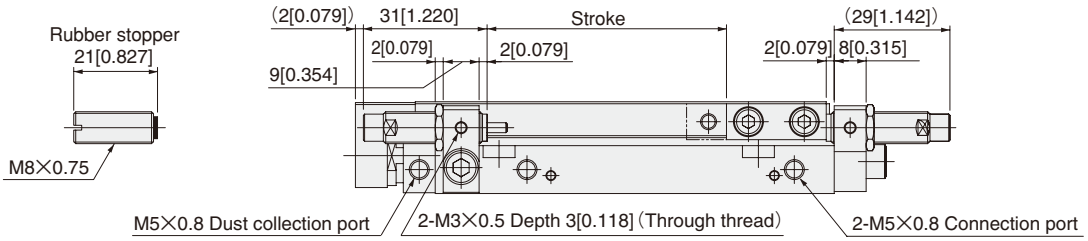

Note: For locking the rubber stopper or metal stopper.
Should never be used for securing the shock absorber.

Piping direction: -L

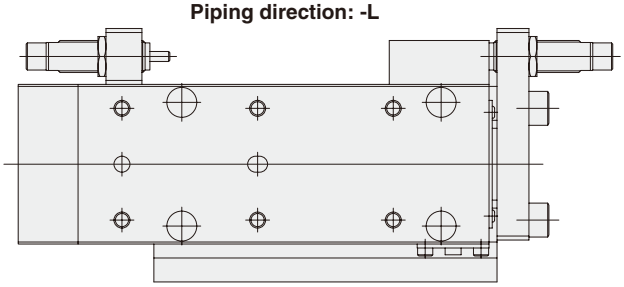

Locating pin: -P (P-MGA2)

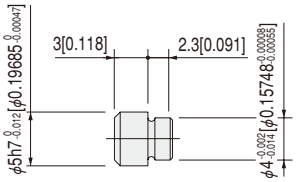

Remark: For cylinder with magnet sensor rail, see p.676.

CS-MGA20

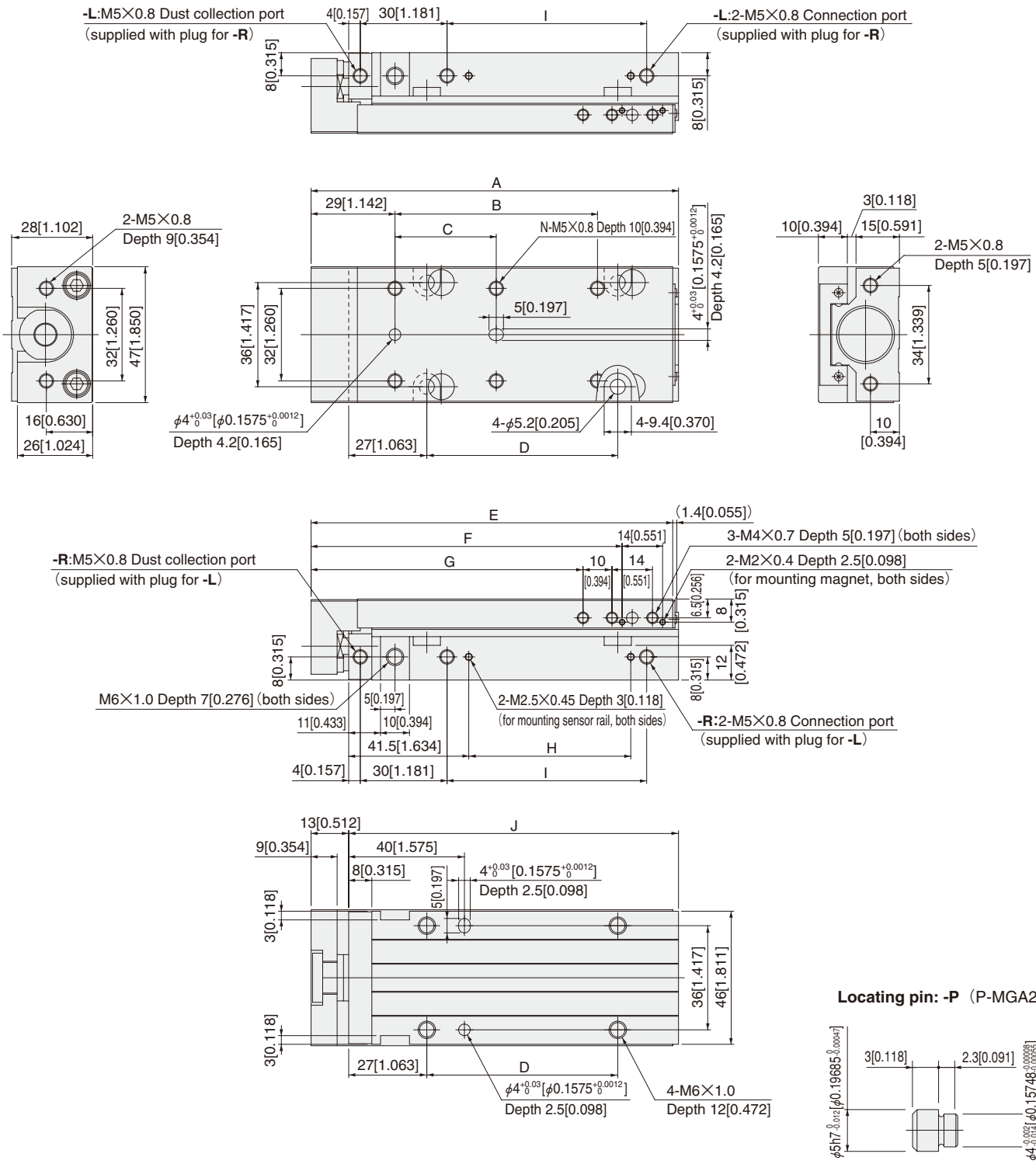

Stroke	A	B	C	D	E	F	G	H	I	J	K	N
10	87 [3.425]	—	30 [1.181]	26 [1.024]	85 [3.346]	67.5 [2.657]	54 [2.126]	16 [0.630]	29 [1.142]	74 [2.913]	46 [1.811]	4
20	87 [3.425]	—	30 [1.181]	26 [1.024]	85 [3.346]	67.5 [2.657]	54 [2.126]	16 [0.630]	29 [1.142]	74 [2.913]	46 [1.811]	4
30	107 [4.213]	—	50 [1.969]	46 [1.811]	105 [4.134]	87.5 [3.445]	74 [2.913]	36 [1.417]	49 [1.929]	94 [3.701]	66 [2.598]	4
40	107 [4.213]	—	50 [1.969]	46 [1.811]	105 [4.134]	87.5 [3.445]	74 [2.913]	36 [1.417]	49 [1.929]	94 [3.701]	66 [2.598]	4
50	127 [5.000]	70 [2.756]	35 [1.378]	66 [2.598]	125 [4.921]	107.5 [4.232]	94 [3.701]	56 [2.205]	69 [2.717]	114 [4.488]	86 [3.386]	6
60	127 [5.000]	70 [2.756]	35 [1.378]	66 [2.598]	125 [4.921]	107.5 [4.232]	94 [3.701]	56 [2.205]	69 [2.717]	114 [4.488]	86 [3.386]	6
70	147 [5.787]	90 [3.543]	45 [1.772]	86 [3.386]	145 [5.709]	127.5 [5.020]	114 [4.488]	76 [2.992]	89 [3.504]	134 [5.276]	106 [4.173]	6
80	147 [5.787]	90 [3.543]	45 [1.772]	86 [3.386]	145 [5.709]	127.5 [5.020]	114 [4.488]	76 [2.992]	89 [3.504]	134 [5.276]	106 [4.173]	6

Dimensions of Clean System Cylinders mm [in.]

●Cylinder with magnet sensor rail CS-MGAS20
●Cylinder with shock absorber CS-MGA□20-SS□

Piping direction: -R

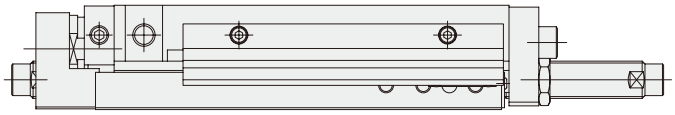

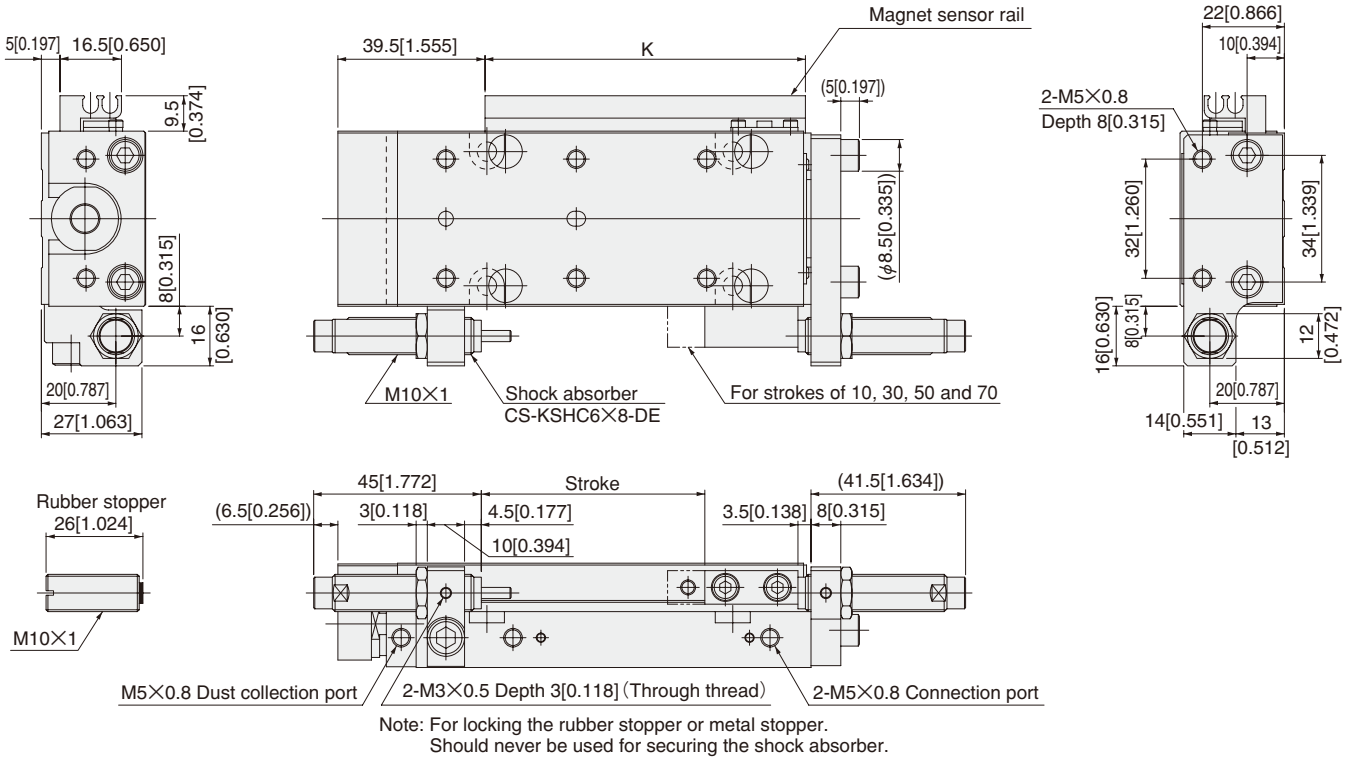

Note: For locking the rubber stopper or metal stopper.
Should never be used for securing the shock absorber.

Piping direction: -L

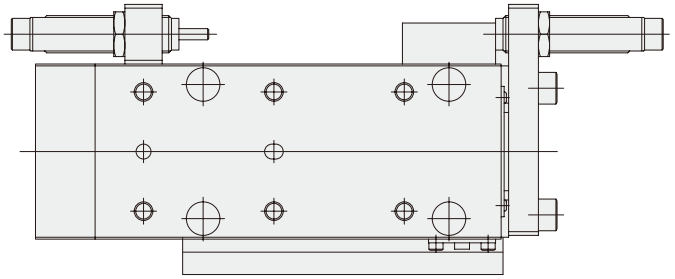

Locating pin: -P (P-MGA2)

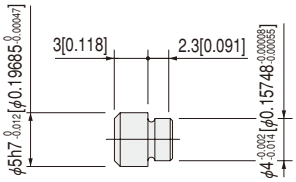

SENSOR SWITCHES

Solid State Type, Reed Switch Type

Order Codes

□ □ - MGAS

Lead wire length
A — 1000mm [39in.]
B — 3000mm [118in.]

Sensor switch

ZE135	Solid state type	2-lead wire	with indicator lamp	DC10～28V	Horizontal lead wire
ZE235	Solid state type	2-lead wire	with indicator lamp	DC10～28V	Vertical lead wire
ZE101	Reed switch type		without indicator lamp	DC5～28V AC85～115V	Horizontal lead wire
ZE201	Reed switch type		without indicator lamp	DC5～28V AC85～115V	Vertical lead wire
ZE155	Solid state type	3-lead wire	with indicator lamp	DC4.5～28V	Horizontal lead wire
ZE255	Solid state type	3-lead wire	with indicator lamp	DC4.5～28V	Vertical lead wire
ZE102	Reed switch type		with indicator lamp	DC10～28V AC85～115V	Horizontal lead wire
ZE202	Reed switch type		with indicator lamp	DC10～28V AC85～115V	Vertical lead wire

●For details of sensor switches, see p.1544.

Moving Sensor Switch

- Loosening the mounting screw allows the sensor switch to be moved along the switch mounting groove of the Mini Guide Slider.
- Tighten the mounting screw with a tightening torque of 0.1～0.2N・m [0.9～1.8in・lbf].

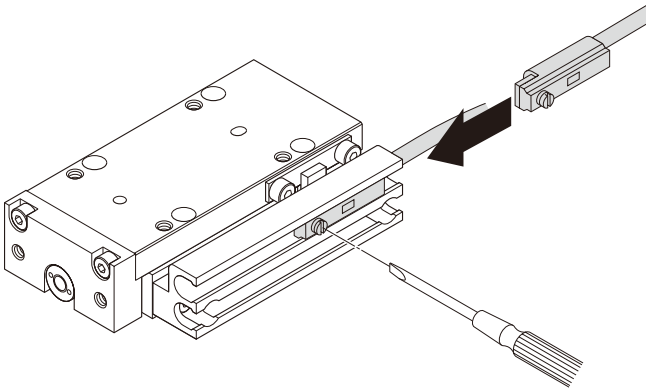

When Mounting the Cylinders with Sensor Switches in Close Proximity

When mounting Mini Guide Sliders in close proximity, install them at the values shown in the table below, or larger.

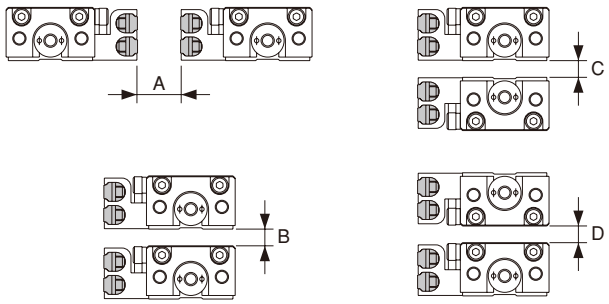

●Solid state type

mm [in.]

Model	A	B	C	D
MGAS4.5	4 [0.16]	2 [0.08]	3 [0.12]	5 [0.20]
MGAS6	3 [0.12]	2 [0.08]	4 [0.16]	4 [0.16]
MGAS8	3 [0.12]	2 [0.08]	4 [0.16]	4 [0.16]
MGAS10	3 [0.12]	2 [0.08]	4 [0.16]	4 [0.16]
MGAS12	3 [0.12]	2 [0.08]	2 [0.08]	4 [0.16]
MGAS16	3 [0.12]	2 [0.08]	2 [0.08]	2 [0.08]
MGAS20	3[0.12]	2 [0.08]	2 [0.08]	2 [0.08]

●Reed switch type

mm [in.]

Model	A	B	C	D
MGAS4.5	2 [0.08]	2 [0.08]	2 [0.08]	2 [0.08]
MGAS6	2 [0.08]	2 [0.08]	4 [0.16]	2 [0.08]
MGAS8	2 [0.08]	2 [0.08]	4 [0.16]	2 [0.08]
MGAS10	2 [0.08]	2 [0.08]	4 [0.16]	2 [0.08]
MGAS12	2 [0.08]	2 [0.08]	2 [0.08]	2 [0.08]
MGAS16	2 [0.08]	2 [0.08]	2 [0.08]	2 [0.08]
MGAS20	2 [0.08]	2 [0.08]	2 [0.08]	2 [0.08]

Sensor Switch Operating Range, Response Differential, and Maximum Sensing Location

- Operating range: ℓ
  The distance the piston travels in one direction, while the switch is in the ON position.
- Response differential: C
  The distance between the point where the piston turns the switch ON and the point where the switch is turned OFF as the piston travels in the opposite direction.

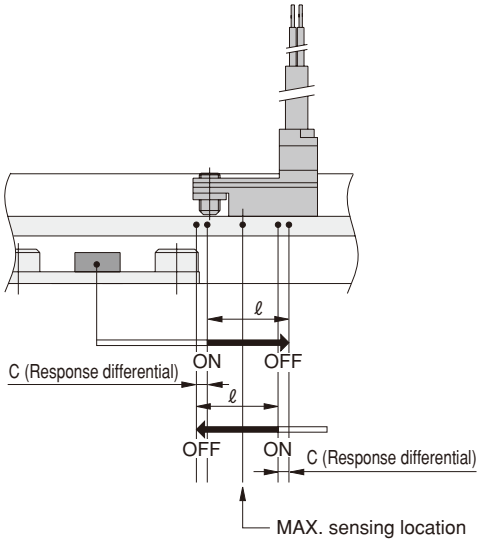

●Solid state type

mm[in.]

Item / Model	MGAS4.5	MGAS6	MGAS8	MGAS10	MGAS12	MGAS16	MGAS20
Operating range : ℓ	1.5～3.2 [0.059～0.126]						
Response differential : C	0.2 [0.008] or less						
MAX. sensing location Note	6 [0.236]						

Remark: The above table shows reference values.
Note: This is the length measured from the switch's opposite end side to the lead wire.

●Reed switch type

mm[in.]

Item / Model	MGAS4.5	MGAS6	MGAS8	MGAS10	MGAS12	MGAS16	MGAS20
Operating range : ℓ	3.0～6.0 [0.118～0.236]						
Response differential : C	1.5 [0.059] or less						
MAX. sensing location Note	10 [0.394]						

Remark: The above table shows reference values.
Note: This is the length measured from the switch's opposite end side to the lead wire.

Mounting Location of End of Stroke Detection Sensor Switch

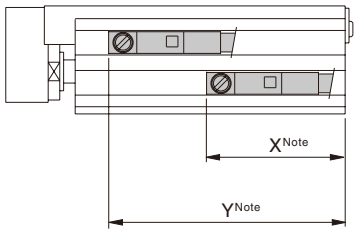

Note : Dimensions from the end of the sensor rail.

●Solid state type

mm[in.]

Model	MGAS4.5		MGAS6			MGAS8				MGAS10				
Stroke	5	10	5	10	15	5	10	15	20	5	10	15	20	30
X	18 [0.709]	18 [0.709]	18 [0.709]	18 [0.709]	18 [0.709]	18 [0.709]	18 [0.709]	18 [0.709]	18 [0.709]	19 [0.748]	19 [0.748]	19 [0.748]	19 [0.748]	19 [0.748]
Y	23 [0.906]	28 [1.102]	23 [0.906]	28 [1.102]	33 [1.299]	23 [0.906]	28 [1.102]	33 [1.299]	38 [1.496]	24 [0.945]	29 [1.142]	34 [1.339]	39 [1.535]	49 [1.929]

mm[in.]

Model	MGAS12						MGAS16						MGAS20							
Stroke	10	20	30	40	50	60	10	20	30	40	50	60	10	20	30	40	50	60	70	80
X	17 [0.669]	17 [0.669]	17 [0.669]	17 [0.669]	17 [0.669]	17 [0.669]	17 [0.669]	17 [0.669]	17 [0.669]	17 [0.669]	17 [0.669]	17 [0.669]	17 [0.669]	17 [0.669]	17 [0.669]	17 [0.669]	17 [0.669]	17 [0.669]	17 [0.669]	17 [0.669]
Y	27 [1.063]	37 [1.457]	47 [1.850]	57 [2.244]	67 [2.638]	77 [3.031]	27 [1.063]	37 [1.457]	47 [1.850]	57 [2.244]	67 [2.638]	77 [3.031]	27 [1.063]	37 [1.457]	47 [1.850]	57 [2.244]	67 [2.638]	77 [3.031]	87 [3.425]	97 [3.819]

●Reed switch type

mm[in.]

Model	MGAS4.5		MGAS6			MGAS8				MGAS10				
Stroke	5	10	5	10	15	5	10	15	20	5	10	15	20	30
X	22 [0.866]	22 [0.866]	22 [0.866]	22 [0.866]	22 [0.866]	22 [0.866]	22 [0.866]	22 [0.866]	22 [0.866]	23 [0.906]	23 [0.906]	23 [0.906]	23 [0.906]	23 [0.906]
Y	27 [1.063]	32 [1.260]	27 [1.063]	32 [1.260]	37 [1.457]	27 [1.063]	32 [1.260]	37 [1.457]	42 [1.654]	28 [1.102]	33 [1.299]	38 [1.496]	43 [1.693]	53 [2.087]

mm[in.]

Model	MGAS12						MGAS16						MGAS20							
Stroke	10	20	30	40	50	60	10	20	30	40	50	60	10	20	30	40	50	60	70	80
X	21 [0.827]	21 [0.827]	21 [0.827]	21 [0.827]	21 [0.827]	21 [0.827]	21 [0.827]	21 [0.827]	21 [0.827]	21 [0.827]	21 [0.827]	21 [0.827]	21 [0.827]	21 [0.827]	21 [0.827]	21 [0.827]	21 [0.827]	21 [0.827]	21 [0.827]	21 [0.827]
Y	31 [1.220]	41 [1.614]	51 [2.008]	61 [2.402]	71 [2.795]	81 [3.189]	31 [1.220]	41 [1.614]	51 [2.008]	61 [2.402]	71 [2.795]	81 [3.189]	31 [1.220]	41 [1.614]	51 [2.008]	61 [2.402]	71 [2.795]	81 [3.189]	91 [3.583]	101 [3.976]

Special Specifications

For the Mini Guide Slider, we have prepared certain special specifications that have been proven to be particalarly popular.

To place an order, enter codes in the parentheses at the end of the order code.

For detailed specifications, dimensions, and delivery schedules, consult us.

1. Low speed and adaptable to speed change specification (-1W)

Suitable for repeated stops and movements, or for operation at fixed low speeds.

Speed range 5 to 300mm/s [0.2～11.8in./sec.]

※ Outward dimensions are the same as the standard products.
※ The -1W option is not available for the clean system cylinder (cleanroom specification).

2. Two sensor switch specification (-4W)

Specifications are for MGA4.5 with 2 sensor switches. Note that the sensor rail protrudes from the table surface by 1.5mm[0.059in.].

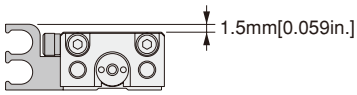

Order example: For low speed and adaptable to speed change specification

●MGA6×10 -R -1W

Caution: The above special specification may vary from the standard products in terms of delivery schedule, price, dimensions, and operating life. Consult us before placing an order.