Low Speed Cylinders

Slow, smooth, and stable operation!

- Enable stable operation from 1mm/s [0.04in./sec.].[Note]
- Smooth operation without stick-slips.
- Suitable for low speed transfer of fragile workpieces.
- Cylinder's outer dimensions are the same as the standard product.
- Wide range of cylinders are available: 6 types and 10 bore sizes.
- Speed controllers for low speed cylinders are also available.

Note : Excluding Jig cylinders with guides.

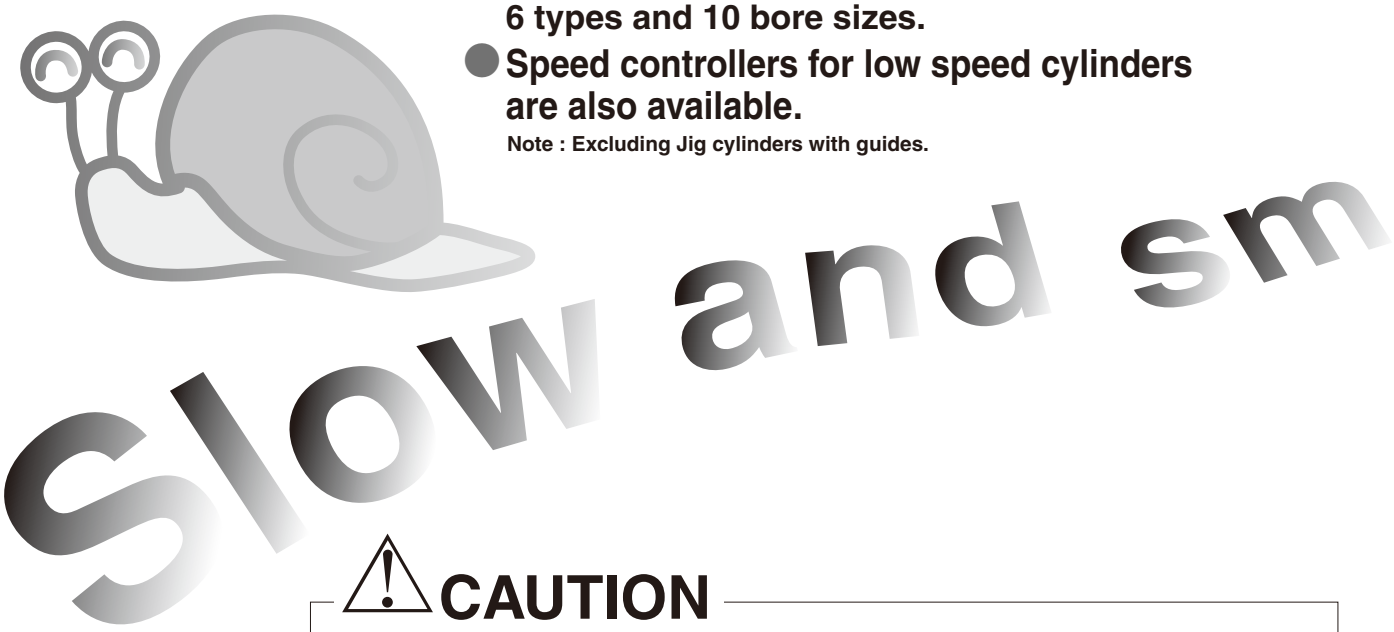

⚠ CAUTION

Always wash your hands thoroughly whenever you happen to touch the grease used in the Low Speed Cylinders. If you light a cigarette with greasy hands, the grease adhered to the cigarette could release toxic gases as it burns. (While the grease used in the Low Speed Cylinder is very stable in chemical terms at room temperature, it would release toxic gases if heated to 250°C [482°F] or higher.)

Waveform of Speed and Displacement

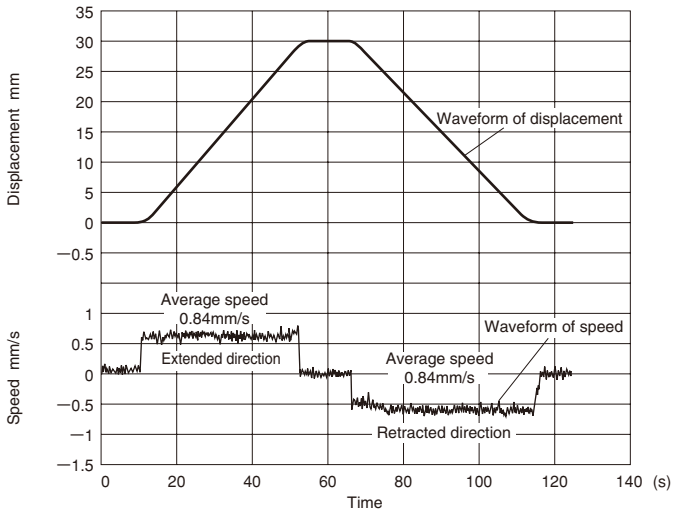

Remarks 1 : The average speed is obtained by dividing the stroke by the time required to travel the stroke. The above average speed values were obtained by tests undertaken at Koganei. They do not imply guaranteed values of the product.
2 : The speed value reads positive when the cylinder is extended.

1mm/s = 0.03944in./sec. 1mm = 0.0394in.

Measurement method

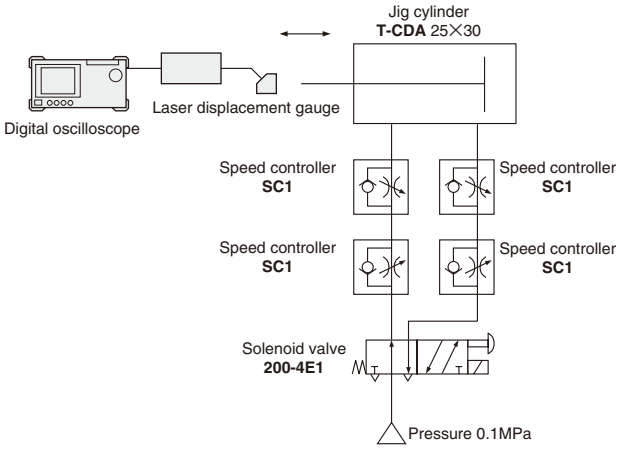

Low Speed Cylinder Variations

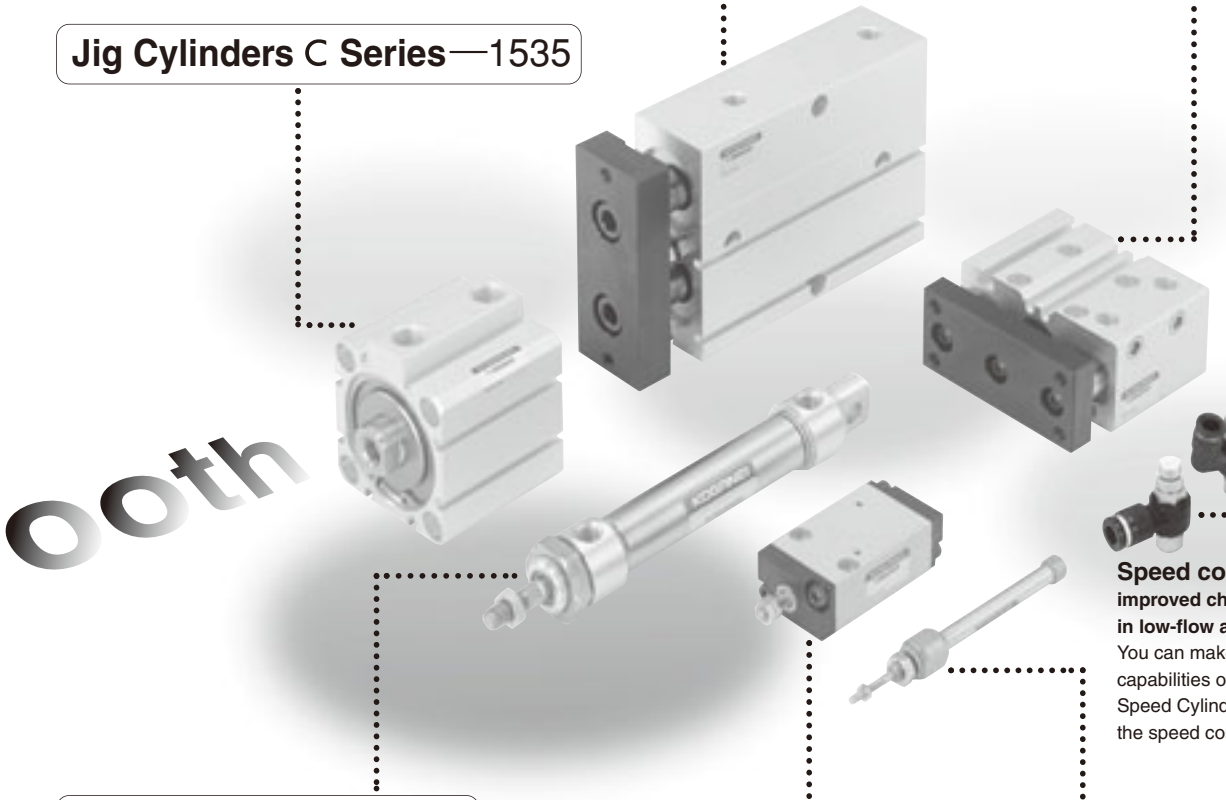

Twin Rod Cylinders —1538

Jig Cylinders with Guides —1539

Jig Cylinders C Series—1535

Speed controller
improved characteristics in low-flow area.
You can make full use of the capabilities of the Low Speed Cylinders by using the speed controllers.

Slim Cylinders —1537

Multi Mount Cylinders —1536

Pen Cylinders—1534

Low speed Control Type Speed Controllers with Quick Fittings —1540

Handling Instructions and Precautions —1533

Application Examples

●**Positioning a wafer stacker**

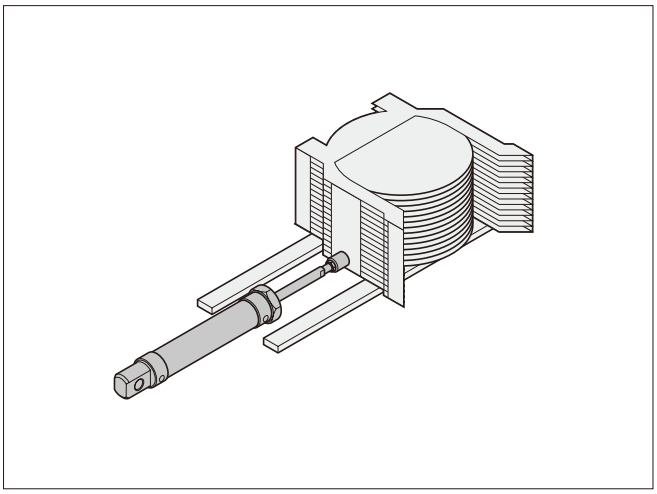

●**Transfer of a liquid crystal display panel**

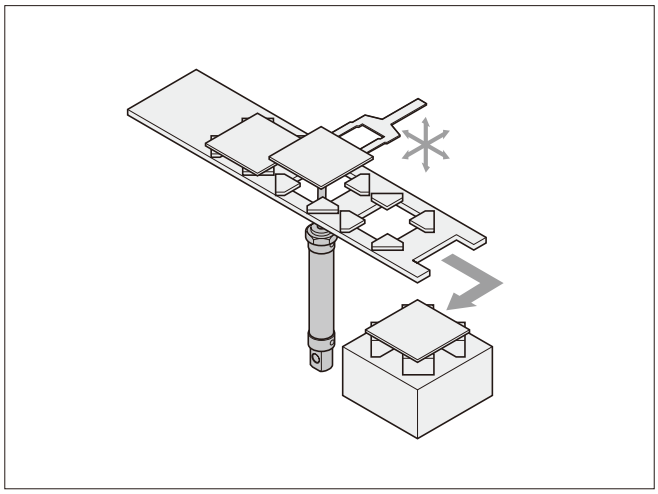

General precautions

1. Always thoroughly blow off (use compressed air) the tubing before piping. Entering metal chips, sealing tape, rust, etc., generated during piping work could result in air leaks or other defective operation.
2. Use air for the media. For the use of any other media, consult us.
3. Air used for the cylinder should be clean air that contains no deteriorated compressor oil, etc. Install an air filter (filtration of a minimum 40 μm) near the cylinder or valve to remove collected liquid or dust. In addition, drain the air filter periodically.
   Collected liquid or dust entering the cylinder may cause improper operation.

Piping

See the diagrams below for piping with the Low Speed Cylinder.

Recommended circuit

❶Basic circuit
Use meter-out speed controllers.

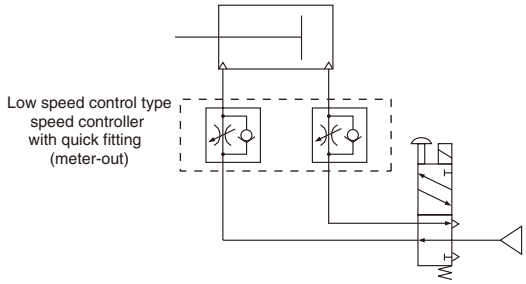

❷Jump start prevention circuit
Use in combination with speed controllers, as shown in the diagram below, is effective for low speed control as well as jump start prevention.

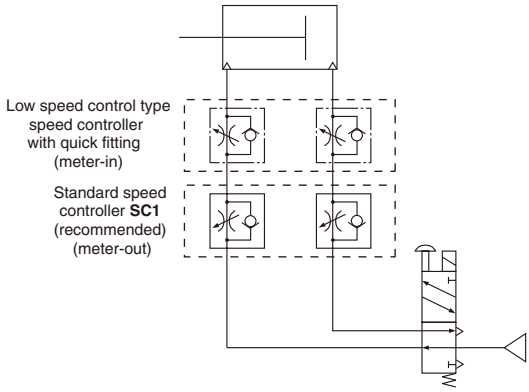

Note: Locate the cylinder and speed controller as close to each other as possible.

LOW SPEED CYLINDERS

Multi Mount Cylinders

Operating speed range
1~200 mm/s
[0.04～7.87in./sec.]

Order Codes

■Function
Blank：Standard type
S：With magnet type

■Cylinder bore size
6：ϕ6 [0.236in.]
10：ϕ10 [0.394in.]
16：ϕ16 [0.630in.]

■Stroke

■Mounting type
Blank：Side mounting type
1A：Foot A mounting type
3A：Flange A mounting type
3B：Flange B mounting type

■Sensor switch
Blank：No sensor switch
ZC130：2-lead wire, Solid state type
ZC153：3-lead wire, Solid state type
CS5T：Without indicator lamp, Reed switch type[Note1]
CS11T：With indicator lamp, Reed switch type[Note1]

■Lead wire length
A：1000mm [39in.]
B：3000mm [118in.]

■Number of sensor switches
1：With 1 sensor switch
n：With n sensor switches

T - B DA

Low speed type
Multi Mount Cylinder
Double acting type

	Note2 6	×	5, 10, 15, 20, 25, 30	Blank -1A -3A -3B	Blank -ZC130 -ZC153 -CS5T -CS11T	A B	1 n
S		×					
	Note2 10	×					
S		×					
	16	×					
S		×					

※The double rod cylinder is not available. In addition, the cylinder for clean systems requires special specifications. For details, consult us.

Notes: 1. If using reed-type sensor switches, maintain an operating speed of 30mm/s [1.2in./sec.] or higher.
2. When using ϕ6 [0.236in.] or ϕ10 [0.394in.] bore size at 1mm/s [0.04in./sec.], apply air pressure of 0.4MPa [58psi.] or more.

● Except the items listed below, all outer dimensions, cylinder specifications, sensor switch specifications, and handling instructions are the same as the standard product. For details, see p.94.

1. Operating speed range: 1～200mm/s [0.04～7.87in./sec.]
2. Lubrication prohibited