Square body demonstrates powerful downsizing capacity.

JIG CYLINDERS C SERIES

Richly abundant series of 9 different types and 69 models

A rich series configuration spanning from φ6 [0.236in.] to φ100 [3.940in.] responds to diverse needs far better than previous thin type cylinders.
Moreover, Non-ion specification is also available as standard.
(Excludes φ6 [0.236in.], φ8 [0.315in.], and φ10 [0.394in.])

Provides powerful back-up for device miniaturization

Exhibits no protrusions in its external shape even after a sensor switch has been mounted, for easy mounting in tight spaces.
This cylinder is one step up on cylinders of the same class in terms of size, mass, and performance.

φ6 [0.236in.]

φ100 [3.940in.]

New Line-Up Includes φ6 [0.236in.], φ8 [0.315in.], and φ10 [0.394in.]

For a greater selection in response to needs for miniaturization, 3 new bore sizes at φ6, φ8, and φ10 have been added, increasing the range of sizes to choose from.

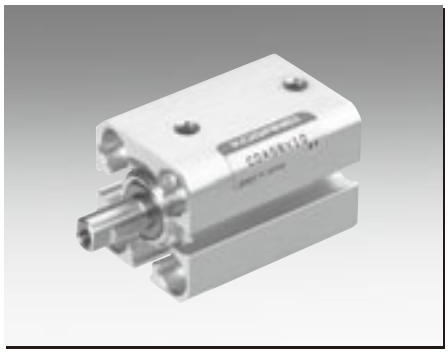

Standard Cylinders
φ6 [0.236in.]～φ100 [3.940in.]

Non-rotating Cylinders
φ6 [0.236in.]～φ10 [0.394in.]

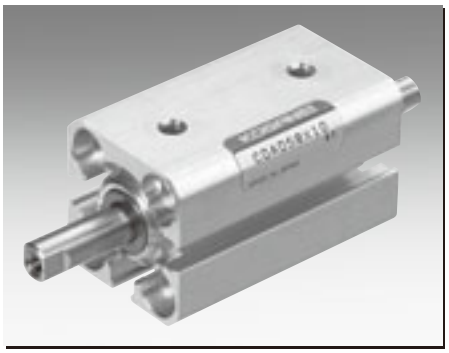

Double Rod Cylinders
φ6 [0.236in.]～φ100 [3.940in.]

The Jig Cylinders C Series Includes the 9 Types Shown Below.

■Standard Cylinders p.137

■Non-rotating Cylinders p.145

■Square Rod Cylinders p.149

■Double Rod Cylinders p.154

■Tandem Cylinders p.161

■Dual Stroke Cylinders p.170

■Lateral Load Resistant Cylinders p.180

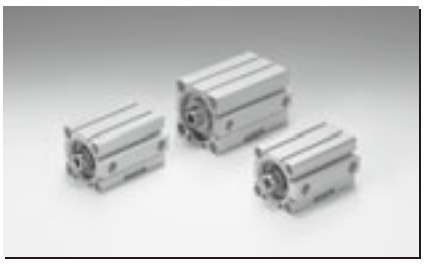

■Long Stroke Cylinders p.185

■End Keep Cylinders p.190

■Mounting Brackets p.197

■Sensor Switches p.199

	Operation type			Cylinder specifications		Rod end specifications		Bumpers	Centering location	Non-ion specification	Mounting brackets		
	Double acting type	Single acting push type	Single acting pull type	Cylinder with magnet	Heat resistant type	Female thread	Male thread	Not available for heat resistant type		Not available for heat resistant type	Foot mounting bracket	Flange mounting bracket	Clevis mounting bracket
Standard Cylinders	■	■	■	■	□	■	■	□	□	□	□	□	
Non-rotating Cylinders	■ Note			■ Note		■ Note	■ Note						
Square Rod Cylinders	□			□		□	□	□	□		□	□	
Double Rod Cylinders	■	■	■	■	□	■	■	□	□	□	□	□	
Tandem Cylinders	□	□		□	□	□	□	□	□	□		□	
Dual Stroke Cylinders	□	□	□	□		□	□	□	□	□		□	
Lateral Load Resistant Cylinders	□			□		□	□	□	□	□	□	□	□
Long Stroke Cylinders	□			□		□	□	□	□	□	□	□	□
End Keep Cylinders	□			□		□	□	□	□	□	□	□	□

■ The colored areas include bore sizes of ϕ6, ϕ8, and ϕ10.
Note: Non-rotating cylinders are set at bore sizes ϕ6, ϕ8, and ϕ10 only.

Cylinder Thrust

Select a suitable bore size considering the load and air pressure to obtain the required thrust.
Since the figures in the table are calculated values, select a bore size that results in a load ratio (load ratio = $\frac{\text{Load}}{\text{Calculated value}}$) of 70% or less (50% or less for high speed).

●Double acting type

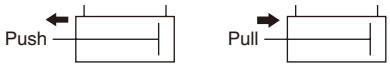

N [lbf.]

Bore size mm [in.]	Piston rod diameter mm [in.]	Operation	Pressure area mm² [in.²]	Air pressure MPa [psi.] 0.1 [15]	0.2 [29]	0.3 [44]	0.4 [58]	0.5 [73]	0.6 [87]	0.7 [102]	0.8 [116]	0.9 [131]	1.0 [145]
6 [0.236]	4 [0.157]	Push side	28.3 [0.0439]	2.8 [0.63]	5.7 [1.28]	8.5 [1.91]	11.3 [2.54]	14.1 [3.17]	17.0 [3.82]	19.8 [4.45]	22.6 [5.08]	25.4 [5.71]	–
		Pull side	15.7 [0.0243]	1.6 [0.36]	3.1 [0.7]	4.7 [1.06]	6.3 [1.42]	7.9 [1.78]	9.4 [2.11]	11.0 [2.47]	12.6 [2.83]	14.1 [3.17]	–
8 [0.315]	5 [0.197]	Push side	50.3 [0.0780]	5.0 [1.12]	10.1 [2.27]	15.1 [3.39]	20.1 [4.52]	25.1 [5.64]	30.2 [6.79]	35.2 [7.91]	40.2 [9.04]	45.2 [10.2]	–
		Pull side	30.6 [0.0474]	3.1 [0.70]	6.1 [1.37]	9.2 [2.07]	12.3 [2.77]	15.3 [3.44]	18.4 [4.14]	21.4 [4.81]	24.5 [5.51]	27.6 [6.20]	–
10 [0.394]	5 [0.197]	Push side	78.5 [0.1217]	7.9 [1.78]	15.7 [3.53]	23.6 [5.31]	31.4 [7.06]	39.3 [8.83]	47.1 [10.6]	55.0 [12.4]	62.8 [14.1]	70.7 [15.9]	–
		Pull side	58.9 [0.0913]	5.9 [1.33]	11.8 [2.65]	17.7 [3.98]	23.6 [5.31]	29.5 [6.63]	35.3 [7.94]	41.2 [9.26]	47.1 [10.6]	53.0 [11.9]	–
12 [0.472]	6 [0.236]	Push side	113.0 [0.175]	11.3 [2.54]	22.6 [5.08]	33.9 [7.62]	45.2 [10.2]	56.5 [12.7]	67.8 [15.2]	79.1 [17.8]	90.4 [20.3]	101.7 [22.86]	113.0 [25.40]
		Pull side	84.8 [0.131]	8.5 [1.91]	17.0 [3.82]	25.4 [5.71]	33.9 [7.62]	42.4 [9.53]	50.9 [11.4]	59.3 [13.3]	67.8 [15.2]	76.3 [17.2]	84.8 [19.1]
16 [0.630]	8 [0.315]	Push side	201.0 [0.312]	20.1 [4.52]	40.2 [9.04]	60.3 [13.6]	80.4 [18.1]	100.5 [22.59]	120.6 [27.11]	140.7 [31.63]	160.8 [36.15]	180.9 [40.67]	201.0 [45.18]
		Pull side	150.0 [0.233]	15.1 [3.39]	30.1 [6.77]	45.2 [10.2]	60.3 [13.6]	75.4 [16.9]	90.4 [20.3]	105.5 [23.72]	120.6 [27.11]	135.6 [30.48]	150.7 [33.88]
20 [0.787]	10 [0.394]	Push side	314.0 [0.487]	31.4 [7.06]	62.8 [14.1]	94.2 [21.2]	125.6 [28.23]	157.0 [35.29]	188.4 [42.35]	219.8 [49.41]	251.2 [56.47]	282.6 [63.53]	314.0 [70.59]
		Pull side	235.5 [0.365]	23.6 [5.31]	47.1 [10.6]	70.7 [15.9]	94.2 [21.2]	117.8 [26.48]	141.3 [31.76]	164.9 [37.07]	188.4 [42.35]	212.0 [47.66]	235.5 [52.94]
25 [0.984]	12 [0.472]	Push side	490.6 [0.760]	49.1 [11.0]	98.1 [22.1]	147.2 [33.09]	196.3 [44.13]	245.3 [55.14]	294.4 [66.18]	343.4 [77.20]	392.5 [88.23]	441.6 [99.27]	490.6 [110.3]
		Pull side	377.6 [0.585]	37.8 [8.50]	75.5 [17.0]	113.3 [25.47]	151.0 [33.94]	188.8 [42.44]	226.6 [50.94]	264.3 [59.41]	302.1 [67.91]	339.8 [76.39]	377.6 [84.88]
32 [1.260]	16 [0.630]	Push side	803.8 [1.246]	80.4 [18.1]	160.8 [36.15]	241.2 [54.22]	321.5 [72.27]	401.9 [90.35]	482.3 [108.4]	562.7 [126.5]	643.1 [144.6]	723.5 [162.6]	803.8 [180.7]
		Pull side	602.9 [0.934]	60.3 [13.6]	120.6 [27.11]	180.9 [40.67]	241.2 [54.22]	301.4 [67.75]	361.7 [81.31]	422.0 [94.87]	482.3 [108.4]	542.6 [122.0]	602.9 [135.5]
40 [1.575]	16 [0.630]	Push side	1256.0 [1.947]	125.6 [28.23]	251.2 [56.47]	376.8 [84.70]	502.4 [112.9]	628.0 [141.2]	753.6 [169.4]	879.2 [197.6]	1004.8 [225.9]	1130.4 [254.1]	1256.0 [282.3]
		Pull side	1055.0 [1.635]	105.5 [23.72]	211.0 [47.43]	316.5 [71.15]	422.0 [94.87]	527.5 [118.6]	633.0 [142.3]	738.5 [166.0]	844.0 [189.7]	949.5 [213.4]	1055.0 [237.2]
50 [1.969]	20 [0.787]	Push side	1962.5 [3.042]	196.3 [44.13]	392.5 [88.23]	588.8 [132.4]	785.0 [176.5]	981.3 [220.6]	1177.5 [264.7]	1373.8 [308.8]	1570.0 [352.9]	1766.3 [397.1]	1962.5 [441.2]
		Pull side	1648.5 [2.555]	164.9 [37.07]	329.7 [74.12]	494.6 [111.2]	659.4 [148.2]	824.3 [185.3]	989.1 [222.3]	1154.0 [259.4]	1318.8 [296.5]	1483.7 [333.5]	1648.5 [370.6]
63 [2.480]	20 [0.787]	Push side	3115.7 [4.829]	311.6 [70.05]	623.1 [140.1]	934.7 [210.1]	1246.3 [280.2]	1557.8 [350.2]	1869.4 [420.2]	2181.0 [490.3]	2492.5 [560.3]	2804.1 [630.4]	3115.7 [700.4]
		Pull side	2801.7 [4.343]	280.2 [62.99]	560.3 [126.0]	840.5 [188.9]	1120.7 [251.9]	1400.8 [314.9]	1681.0 [377.9]	1961.2 [440.9]	2241.3 [503.8]	2521.5 [566.8]	2801.7 [629.8]
80 [3.150]	25 [0.984]	Push side	5024.0 [7.787]	502.4 [112.9]	1004.8 [225.9]	1507.2 [338.8]	2009.6 [451.8]	2512.0 [564.7]	3014.4 [677.6]	3516.8 [790.6]	4019.2 [903.5]	4521.6 [1016.5]	5024.0 [1129.4]
		Pull side	4533.4 [7.027]	453.3 [101.9]	906.7 [203.8]	1360.0 [305.7]	1813.4 [407.7]	2266.7 [509.6]	2720.0 [611.5]	3173.4 [713.4]	3626.7 [815.3]	4080.0 [917.2]	4533.4 [1019.1]
100 [3.940]	32 [1.181]	Push side	7850.0 [12.168]	785.0 [176.5]	1570.0 [352.9]	2355.0 [529.4]	3140.0 [705.9]	3925.0 [882.3]	4710.0 [1058.8]	5495.0 [1235.3]	6280.0 [1411.7]	7065.0 [1588.2]	7850.0 [1764.7]
		Pull side	7046.2 [10.922]	704.6 [158.4]	1409.2 [316.8]	2113.8 [475.2]	2818.5 [633.6]	3523.1 [792.0]	4227.7 [950.4]	4932.3 [1108.8]	5636.9 [1267.2]	6341.5 [1425.6]	7046.2 [1584.0]

●Single acting type

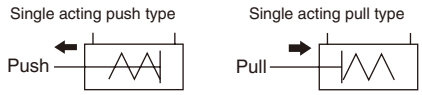

N [lbf.]

Operation type	Bore size mm [in.]	Piston rod diameter mm [in.]	Pressure area mm² [in.²]	Air pressure MPa [psi.] 0.1 [15]	0.2 [29]	0.3 [44]	0.4 [58]	0.5 [73]	0.6 [87]	0.7 [102]	0.8 [116]	0.9 [131]	1.0 [145]
Single acting push type	**6 [0.236]**	4 [0.157]	28.3 [0.0439]	–	–	5.6 [1.26]	8.4 [1.89]	11.2 [2.52]	14.1 [3.17]	16.9 [3.80]	19.7 [4.43]	22.5 [5.06]	–
	8 [0.315]	5 [0.197]	50.3 [0.0780]	–	–	10.4 [2.34]	15.4 [3.46]	20.4 [4.59]	25.5 [5.73]	30.5 [6.86]	35.5 [7.98]	40.5 [9.10]	–
	10 [0.394]	5 [0.197]	78.5 [0.1217]	–	–	18.9 [4.25]	26.7 [6.00]	34.6 [7.78]	42.4 [9.53]	50.3 [11.3]	58.1 [13.1]	66.0 [14.8]	–
	12 [0.472]	6 [0.236]	113.0 [0.175]	–	12.8 [2.88]	24.1 [5.42]	35.4 [7.96]	46.7 [10.5]	58.0 [13.0]	69.3 [15.6]	80.6 [18.1]	91.9 [20.7]	103.2 [23.20]
	16 [0.630]	6 [0.236]	201.0 [0.312]	–	26.1 [5.87]	46.2 [10.4]	66.3 [14.9]	86.4 [19.4]	106.5 [23.94]	126.6 [28.46]	146.7 [32.98]	166.8 [37.50]	186.9 [42.02]
	20 [0.787]	8 [0.315]	314.0 [0.487]	–	49.0 [11.0]	80.4 [18.1]	111.8 [25.13]	143.2 [32.19]	174.6 [39.25]	206.0 [46.31]	237.4 [53.37]	268.8 [60.43]	300.2 [67.48]
	25 [0.984]	10 [0.394]	490.6 [0.760]	–	76.3 [17.2]	125.4 [28.19]	174.5 [39.23]	223.5 [50.24]	272.6 [61.28]	321.6 [72.30]	370.7 [83.33]	419.8 [94.37]	468.8 [105.4]
	32 [1.260]	12 [0.472]	803.8 [1.246]	–	123.4 [27.74]	203.8 [45.81]	284.1 [63.87]	364.5 [81.94]	444.9 [100.0]	525.3 [118.1]	605.7 [136.2]	686.1 [154.2]	766.4 [172.3]
	40 [1.575]	16 [0.630]	1256.0 [1.947]	–	205.9 [46.29]	331.5 [74.52]	457.1 [102.8]	582.7 [131.0]	708.3 [159.2]	833.9 [187.5]	959.5 [215.7]	1085.1 [243.9]	1210.5 [272.1]
	50 [1.969]	20 [0.787]	1962.5 [3.042]	141.0 [31.70]	337.2 [75.80]	533.5 [119.9]	729.7 [164.0]	926.0 [208.2]	1122.2 [252.3]	1318.5 [296.4]	1514.7 [340.5]	1711.0 [384.6]	1907.2 [428.7]
Single acting pull type	**6 [0.236]**	4 [0.157]	15.7 [0.0243]	–	–	1.8 [0.40]	3.4 [0.76]	5.0 [1.12]	6.5 [1.46]	8.1 [1.82]	9.7 [2.18]	11.2 [2.52]	–
	8 [0.315]	5 [0.197]	30.6 [0.0474]	–	–	4.5 [1.01]	7.6 [1.71]	10.6 [2.38]	13.7 [3.08]	16.7 [3.75]	19.8 [4.45]	22.9 [5.15]	–
	10 [0.394]	5 [0.197]	58.9 [0.0913]	–	–	13.0 [2.92]	18.9 [4.25]	24.8 [5.58]	30.6 [6.88]	36.5 [8.21]	42.4 [9.53]	48.3 [10.9]	–
	12 [0.472]	6 [0.236]	84.8 [0.131]	–	7.2 [1.62]	15.6 [3.51]	24.1 [5.42]	32.6 [7.33]	41.1 [9.24]	49.5 [11.1]	58.0 [13.0]	66.5 [14.9]	75.0 [16.9]
	16 [0.630]	6 [0.236]	150.7 [0.234]	–	16.0 [3.60]	31.1 [6.99]	46.2 [10.4]	61.3 [13.8]	76.3 [17.2]	91.4 [20.5]	106.5 [23.94]	121.5 [27.31]	136.6 [30.71]
	20 [0.787]	8 [0.315]	235.5 [0.365]	–	33.3 [7.49]	56.9 [12.8]	80.4 [18.1]	104.0 [23.38]	127.5 [28.66]	151.1 [33.97]	174.6 [39.25]	198.2 [44.56]	221.7 [49.84]
	25 [0.984]	10 [0.394]	377.6 [0.585]	–	75.5 [17.0]	113.3 [25.47]	151.0 [33.94]	188.8 [42.44]	226.6 [50.94]	264.3 [59.41]	302.1 [67.91]	339.8 [76.39]	377.6 [84.88]
	32 [1.260]	12 [0.472]	602.9 [0.934]	–	61.4 [13.8]	121.7 [27.36]	182.0 [40.91]	242.2 [54.45]	302.5 [68.00]	362.8 [81.56]	423.1 [95.11]	483.4 [108.7]	543.7 [122.2]
	40 [1.575]	16 [0.630]	1055.0 [1.635]	–	165.7 [37.25]	271.2 [60.97]	376.7 [84.68]	482.2 [108.4]	587.7 [132.1]	693.2 [155.8]	798.7 [179.5]	904.2 [203.3]	1009.7 [227.0]
	50 [1.969]	20 [0.787]	1648.5 [2.555]	109.6 [24.64]	274.4 [61.69]	439.3 [98.75]	604.1 [135.8]	769.0 [172.9]	933.8 [209.9]	1098.7 [247.0]	1263.5 [284.0]	1428.4 [321.1]	1593.2 [358.2]

●Spring return force

N [lbf.]

Bore size mm	Stroke mm	Zero stroke	End of stroke
6	× 5 ×10	2.1 [0.47] 1.2 [0.27]	2.9 [0.65]
8	× 5 ×10	3.3 [0.74] 1.9 [0.43]	4.7 [1.06]
10	× 5 ×10	3.3 [0.74] 1.9 [0.43]	4.7 [1.06]
12	× 5 ×10 ×15 ×20 ×25 ×30	7.7 [1.73] 5.7 [1.28] 3.7 [0.83] 5.7 [1.28] 4.7 [1.06] 3.7 [0.83]	9.8 [2.20]
16	× 5 ×10 ×15 ×20 ×25 ×30	11.1 [2.50] 8.2 [1.84] 5.3 [1.19] 8.2 [1.84] 6.7 [1.51] 5.3 [1.19]	14.1 [3.17]
20	× 5 ×10 ×15 ×20 ×25 ×30	11.6 [2.61] 9.5 [2.14] 7.3 [1.64] 9.5 [2.14] 8.4 [1.89] 7.3 [1.64]	13.8 [3.10]

N [lbf.]

Bore size mm	Stroke mm	Zero stroke	End of stroke
25	× 5 ×10 ×15 ×20 ×25 ×30	18.1 [4.07] 14.5 [3.26] 10.7 [2.41] 14.5 [3.26] 12.7 [2.85] 10.9 [2.45]	21.8 [4.90]
32	× 5 ×10 ×15 ×20 ×25 ×30	32.0 [7.19] 26.7 [6.00] 21.3 [4.79] 26.7 [6.00] 24.0 [5.40] 21.3 [4.79]	37.4 [8.41]
40	× 5 ×10 ×15 ×20 ×25 ×30	37.7 [8.47] 30.2 [6.79] 22.6 [5.08] 30.2 [6.79] 26.4 [5.93] 22.6 [5.08]	45.3 [10.18]
50	×10 ×15 ×20 ×25 ×30 ×35 ×40	45.4 [10.21] 40.5 [9.10] 35.5 [7.98] 43.0 [9.67] 40.5 [9.10] 38.0 [8.54] 35.5 [7.98]	55.3 [12.43]

●How to read the thrust table

1. For the thrust of the double rod cylinder double acting type, see the pull side of the double acting type thrust table. For the thrust of the single acting type, see the single acting pull type thrust table.
2. The thrust of the tandem cylinder is double that of the standard type when air is supplied simultaneously to Port A and Port B, for any operation type before the stroke in Cylinder 1 is complete. When air is supplied to any of Ports A, B, or C alone, then the thrust is the same as for the standard type.

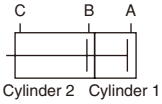

3. The thrust for dual stroke cylinders is the same as for the standard type, for any operation type.
4. When directly carrying a load, care must be exercised of a lateral load.
   For details, see p.206 “Lateral Load.”

●Square rod cylinders

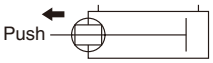

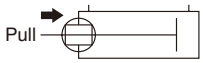

N [lbf.]

Bore size mm [in.]	Piston rod size mm [in.]	Operation	Pressure area mm² [in.²]	Air pressure MPa 0.1 [15]	0.2 [29]	0.3 [44]	0.4 [58]	0.5 [73]	0.6 [87]	0.7 [102]	0.8 [116]	0.9 [131]	1.0 [145]
20 [0.787]	□7.4 [□0.291]	Push side	314.0 [0.487]	31.4 [7.06]	62.8 [14.1]	94.2 [21.2]	125.6 [28.23]	157.0 [35.29]	188.4 [42.35]	219.8 [49.41]	251.2 [56.47]	282.6 [63.53]	314.0 [70.59]
		Pull side	259.2 [0.402]	25.9 [5.82]	51.8 [11.6]	77.8 [17.5]	103.7 [23.3]	129.6 [29.13]	155.5 [34.96]	181.5 [40.80]	207.4 [46.62]	233.3 [52.45]	259.2 [58.27]
25 [0.984]		Push side	490.6 [0.760]	49.1 [11.0]	98.1 [22.1]	147.2 [33.09]	196.3 [44.13]	245.3 [55.14]	294.4 [66.18]	343.4 [77.20]	392.5 [88.23]	441.6 [99.27]	490.6 [110.3]
		Pull side	435.9 [0.676]	43.6 [9.80]	87.2 [19.6]	130.8 [29.40]	174.3 [39.18]	217.9 [48.98]	261.5 [58.79]	305.1 [68.59]	348.7 [78.39]	392.3 [88.19]	435.9 [97.99]
32 [1.260]	□13 [□0.512]	Push side	803.8 [1.246]	80.4 [18.1]	160.8 [36.15]	241.2 [54.22]	321.5 [72.27]	401.9 [90.35]	482.3 [108.4]	562.7 [126.5]	643.1 [144.6]	723.5 [162.6]	803.8 [180.7]
		Pull side	634.8 [0.984]	63.5 [14.3]	127.0 [28.55]	190.5 [42.82]	253.9 [57.08]	317.4 [71.35]	380.9 [85.63]	444.4 [99.90]	507.9 [114.2]	571.4 [128.5]	634.8 [142.7]
40 [1.575]		Push side	1256.0 [1.947]	125.6 [28.23]	251.2 [56.47]	376.8 [84.70]	502.4 [112.9]	628.0 [141.2]	753.6 [169.4]	879.2 [197.6]	1004.8 [225.9]	1130.4 [254.1]	1256.0 [282.3]
		Pull side	1087.0 [1.685]	108.7 [24.44]	217.4 [48.87]	326.1 [73.31]	434.8 [97.74]	543.5 [122.2]	652.2 [146.6]	760.9 [171.1]	869.6 [195.5]	978.3 [219.9]	1087.0 [244.4]
50 [1.969]	□18 [□0.709]	Push side	1962.5 [3.042]	196.3 [44.13]	392.5 [88.23]	588.8 [132.4]	785.0 [176.5]	981.3 [220.6]	1177.5 [264.7]	1373.8 [308.8]	1570.0 [352.9]	1766.3 [397.1]	1962.5 [441.2]
		Pull side	1638.5 [2.540]	163.9 [36.84]	327.7 [73.67]	491.6 [110.5]	655.4 [147.3]	819.3 [184.2]	983.1 [221.0]	1147.0 [257.8]	1310.8 [294.7]	1474.7 [331.5]	1638.5 [368.3]
63 [2.480]		Push side	3115.7 [4.829]	311.6 [70.05]	623.1 [140.1]	934.7 [210.1]	1246.3 [280.2]	1557.8 [350.2]	1869.4 [420.2]	2181.0 [490.3]	2492.5 [560.3]	2804.1 [630.4]	3115.7 [700.4]
		Pull side	2791.7 [4.327]	279.2 [62.76]	558.3 [125.5]	837.5 [188.3]	1116.7 [251.0]	1395.8 [313.8]	1675.0 [376.5]	1954.2 [439.3]	2233.3 [502.0]	2512.5 [564.8]	2791.7 [627.6]

JIG CYLINDERS C SERIES NON-ROTATING CYLINDERS

Double Acting Type

Symbol

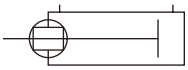

Specifications

Item / Bore size mm [in.]	6 [0.236]	8 [0.315]	10 [0.394]
Operation type	Double acting type		
Media	Air		
Operating pressure range MPa [psi.]	0.15～0.9 [22～131]		
Proof pressure MPa[psi.]	1.35 [196]		
Operating temperature range °C [°F]	0～60 [32～140]		
Operating speed range mm/s [in./sec.]	50～500 [2.0～19.7]		
Cushion	—		
Lubrication	Not required (If lubrication is required, use Turbine Oil Class 1 [**ISO VG32**] or equivalent.)		
Non-rotating accuracy	±2°	±1.6°	±1.4°
Port size	M3×0.5		

Remark: For Handling Instructions and Precautions, see p.205.

Bore Size and Stroke

For non-standard strokes, see p.206.

mm

Bore size	Standard strokes	
	Standard cylinder	Cylinder with magnet
6	5, 10	5, 10
8		
10		

Remark: Stroke tolerance $^{+1}_{0}$ [$^{+0.039}_{0}$ in.]

Order Codes for Non-rotating Cylinders

■ Operation type

DA : Double acting type

■ Rod end specification

Female thread

Male thread

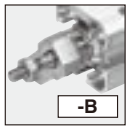

■ Sensor switch type Note2
(For cylinder with magnet)

Blank:
No sensor switch

-ZE135 : With ZE135
- 2-lead wire Solid state type
- With indicator lamp
- DC10～28V
- Horizontal lead wire

-ZE235 : With ZE235
- 2-lead wire Solid state type
- With indicator lamp
- DC10～28V
- Vertical lead wire

-ZE155 : With ZE155
- 3-lead wire Solid state type
- With indicator lamp
- DC4.5～28V
- Horizontal lead wire

-ZE255 : With ZE255
- 3-lead wire Solid state type
- With indicator lamp
- DC4.5～28V
- Vertical lead wire

■ Lead wire length

A : 1000mm [39in.]
B : 3000mm [118in.]

■ Number of sensor switches
(For cylinder with magnet)
Blank:
No sensor switch

1 : With 1 sensor switch
2 : With 2 sensor switches

■ Non-rotating cylinder

■ Cylinder specification

Blank : Standard cylinder Note1
S : Cylinder with magnet

Basic type				Bore size×Stroke				
C	DA	L	S	×	-B	-ZE135 -ZE155 -ZE235 -ZE255	A B	1 2 ⋮ n

- See table for bore size and stroke.
- For information regarding the cylinder joint and cylinder rod end for male thread, see p.1568.
- For the order codes of sensor switches only, see p.199.

Notes: 1. In the standard cylinder, a magnet for the sensor switch is not built-in.
2. For details of sensor switches, see p.1544.

Inner Construction and Major Parts

●Double acting type

●ϕ6～ϕ10

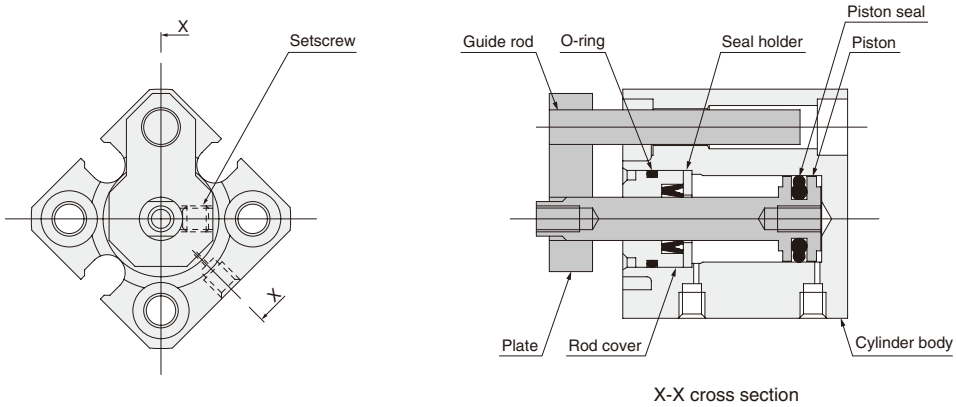

X-X cross section

●Cylinder with magnet

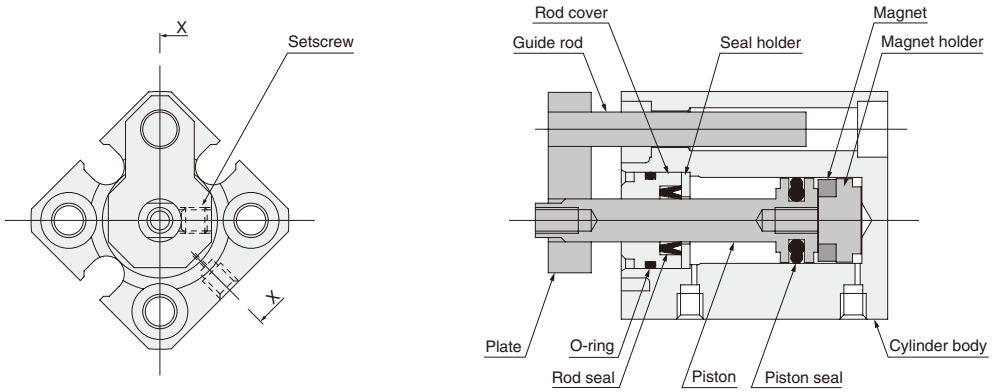

X-X cross section

Major Parts and Materials

Parts \ Bore mm	ϕ6～ϕ10
Cylinder body	Aluminum alloy (anodized)
Piston	Stainless steel
Seal	Synthetic rubber (NBR)
Seal holder	Copper alloy
Rod cover	Aluminum alloy (special wear resistant treatment)
Plate	Copper alloy (nickel plated)
Setscrew	Steel
Magnet	Neodymium magnet
Magnet holder	Copper alloy
Guide rod	Stainless steel

Mass

g [oz.]

Bore size mm [in.]	Basic mass Note1		Mass with sensor		Additional mass of sensor switch Note2	
	5mm stroke	10mm stroke	5mm stroke	10mm stroke	**ZE□□□A**	**ZE□□□B**
6 [0.236]	19.8 [0.698]	23.4 [0.825]	23.1 [0.815]	27.1 [0.956]	15 [0.53]	35 [1.23]
8 [0.315]	26.4 [0.931]	31.1 [1.097]	31.2 [1.101]	36.3 [1.280]		
10 [0.394]	33.7 [1.189]	39.2 [1.383]	39.9 [1.407]	45.9 [1.619]		

Notes: 1. The above table is for the standard strokes.
2. Sensor switch codes A and B show the lead wire lengths.
A: 1000mm [39in.] B: 3000mm [118in.]

Calculation example: For the mass of a double acting type cylinder with magnet, bore size of 8mm, stroke of 10mm, and with 2 sensor switches (**ZE135A**)
36.3＋(15×2)＝66.3g [2.339oz.]

Dimensions of Non-rotating Cylinder Double Acting Type (mm)

● ϕ6～ϕ10

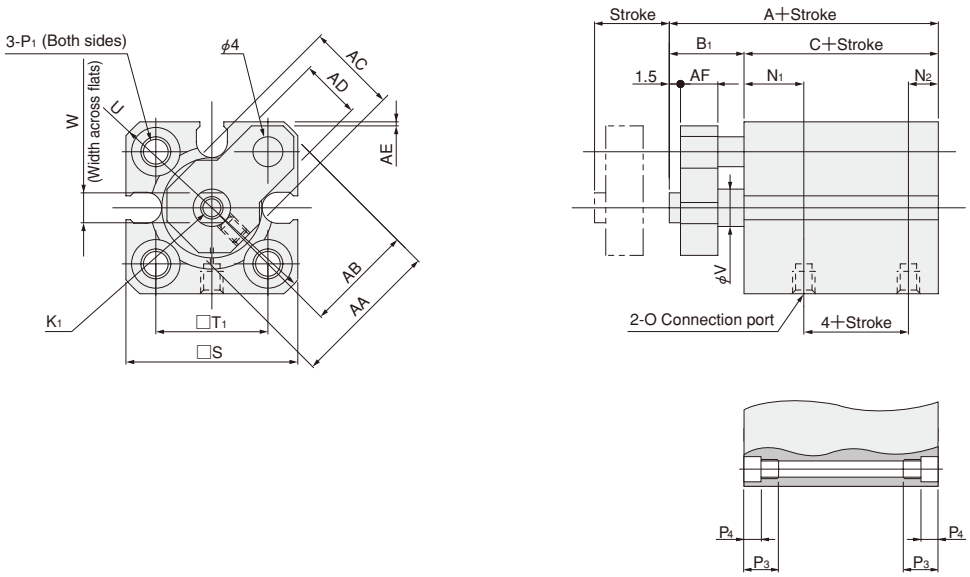

Type / Bore mm [in.] \ Code	Standard cylinder (CDAL)			Cylinder with magnet (CDALS)			K_1	N_1	N_2	O	P_1
	A	B_1	C	A	B_1	C					
6 [0.236]	24	10	14	29	10	19	M2.5×0.45 Depth5	6.5	3.5	M3×0.5	ϕ3.3 (Thru hole) C'bore ϕ6 (Both sides) and M4×0.7 (Both sides)
8 [0.315]	25	10	15	30	10	20	M3×0.5 Depth5	7.5	3.5	M3×0.5	ϕ3.3 (Thru hole) C'bore ϕ6.2 (Both sides) and M4×0.7 (Both sides)
10 [0.394]	26	10	16	31	10	21	M3×0.5 Depth5	8	4	M3×0.5	ϕ3.3 (Thru hole) C'bore ϕ6.2 (Both sides) and M4×0.7 (Both sides)

Bore mm [in.] \ Code	P_3	P_4	S	T_1	U	V	W	Appropriate through bolt	AA	AB	AC	AD	AE	AF
6 [0.236]	9.5	3.5	19	11	R12	4	3.5	M3	15	11.5	9.5	7	0.3	5
8 [0.315]	9.5	3.5	21	13	R13.5	5	4	M3	17	12.5	11	7	0.6	5
10 [0.394]	9.5	3.5	23	15	R15	5	4	M3	20	14.5	12	8	0.5	5

Dimensions of Male Rod End Thread Specification (mm)

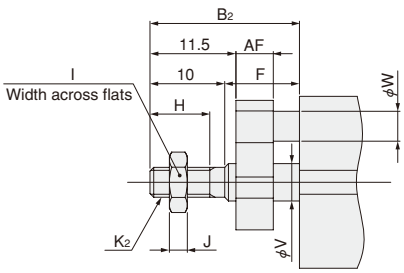

Bore mm [in.] \ Code	B_2	F	H	I	J	K_2	V	W	AF
6 [0.236]	20	10	8	5.5	1.8	M3×0.5	4	4	5
8 [0.315]	20	10	8	7	2.4	M4×0.7	5	4	5
10 [0.394]	20	10	8	7	2.4	M4×0.7	5	4	5

Remark: Cylinder joints and cylinder rod ends are available for mounting with the rod end male thread specification. For details, see p.1568.

JIG CYLINDERS C SERIES MOUNTING BRACKETS

Foot Mounting Bracket, Flange Mounting Bracket, Clevis Mounting Bracket

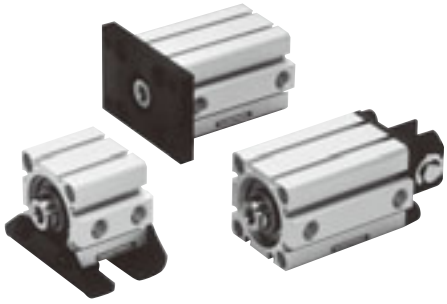

Order Codes of Mounting Bracket Only

□ – **CDA** □

Bore size ϕ **12～**ϕ **100** Note5

Cylinder type
CDA —— For standard, double rod end, tandem, dual stroke, long stroke, lateral load resistant, and end keep cylinder
CDAL —— For square rod cylinder Note4

Mounting bracket
1 —— Foot bracket Note1
● One set consists of 2 brackets.
3 —— Flange bracket Note2
7 —— Clevis bracket Note3

Notes: 1. Cannot be mounted on tandem or dual stroke cylinders.
And cannot be mounted on the 5mm strokes of ϕ 16 and ϕ 25, and 10mm strokes of ϕ 50, ϕ 63, and ϕ 80 of the standard cylinders.
2. Cannot be mounted on the head side of the tandem cylinder, cylinder 1 side of the dual stroke cylinder, the rod side of the square rod cylinder with centering location, or the bore size ϕ 40 with centering location (**-G**).
3. Cannot be used with anything other than the long stroke cylinder, the lateral load resistant cylinder, or the end keep cylinder.
4. Applicable to the foot mounting bracket only.
5. Not available for ϕ 6 [0.236in.], ϕ 8 [0.315in.], and ϕ 10 [0.394in.].

Dimensions of Foot Mounting Bracket (mm)

CAD ϕ 12～ϕ 40 : CDA-OP1, ϕ 50～ϕ 100 : CDA-OP2

● ϕ 12～ϕ 16

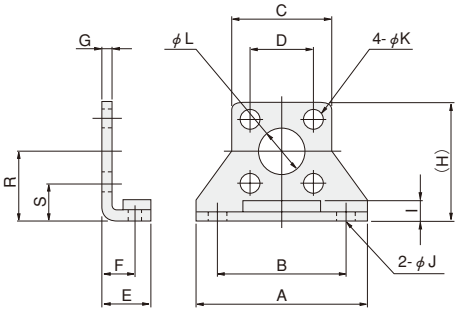

● ϕ 20～ϕ 100

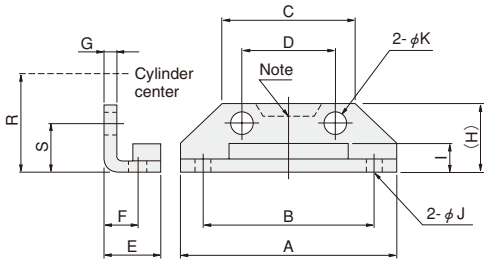

Note: Only for ϕ 50

● Mounting screw

For ϕ 12～ϕ 80

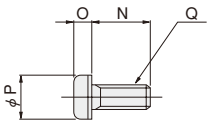

For ϕ 100

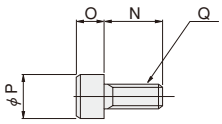

Material: Steel

Bore mm [in.] \ Code	A	B	C	D	E	F	G	H	I	J	K	L	N	O	P	Q	R	S	Mass g [oz.]
12 [0.472]	44	34	25	16.3	12.5	8	2	29.5	4.5	4.5	5.5	11	12	2.7	9.5	M5	17	8.9	50 [1.76]
16 [0.630]	48	38	29	19.8	13	8	2	33.5	4.5	4.5	5.5	11	12	2.7	9.5	M5	19	9.1	62 [2.19]
20 [0.787]	54	44	34	24	15	9.2	3.2	16.5	7	4.5	5.5	—	12 (12, 20)	2.7	9.5	M5	24	12	84 [2.96] (87 [3.07])
25 [0.984]	64	52	40	28	16.5	10.7	3.2	17.5	6	5.5	6.6	—	14 (14, 22)	3.3	10.5	M6	26	12	104 [3.67] (108 [3.81])
32 [1.260]	68	56	44	34	17	11.2	3.2	19	8	5.5	6.6	—	14 (14, 25)	3.3	10.5	M6	30	13	126 [4.44] (131 [4.62])
40 [1.575]	78	64	52	40	18.2	11.2	3.2	19	7	6.6	9	—	20 (20, 30)	4.4	14	M8	33	13	160 [5.64] (168 [5.93])
50 [1.969]	96	78	62	48	22.7	14.7	3.2	22	8	9	9	—	20 (20, 35)	4.4	14	M8	39	15	220 [7.76] (232 [8.18])
63 [2.480]	108	90	75	60	25.2	16.2	3.2	24	8.5	9	9	—	20 (20, 35)	4.4	14	M8	46	16	300 [10.58] (312 [11.01])
80 [3.150]	134	112	94	74	30.5	19.5	4.5	33	12	11	14	—	25	6.6	21	M12	59	22	644 [22.72]
100 [3.940]	160	134	114	90	35.5	23	6	40	14	14	16	—	30	14	21	M14	71	26	1172 [41.34]

Remark: Figures in parentheses ( ) are for square rod cylinders.
Two figures in parentheses ( ), Left side: for head side; Right side: for rod side

Dimensions of Flange Mounting Bracket (mm)

CAD φ12～φ40：CDA-OP3, φ50～φ100：CDA-OP4

● φ12～φ16

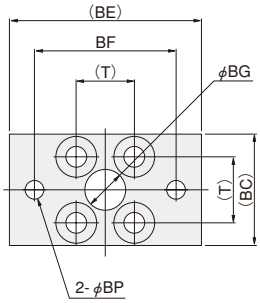

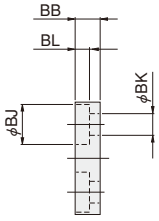

●Mounting screw For φ12～φ80

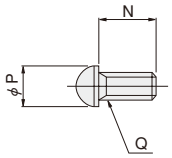

● φ20～φ100

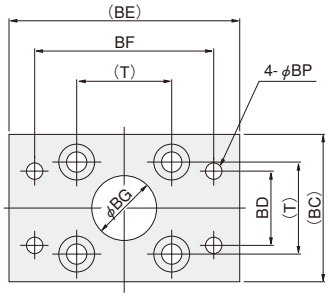

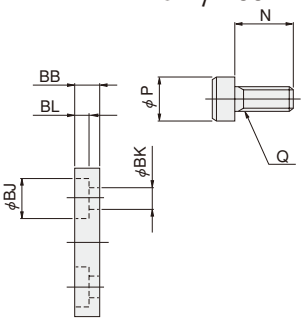

●Mounting screw For φ100

Material: Steel

Bore mm [in.] \ Code	N	P	Q	T	BB	BC	BD	BE	BF	BG	BJ	BK	BL	BP	Mass g [oz.]
12 [0.472]	12	9.5	M5	16.3	6	28	—	50	38	11	10	5.5	3.6	4.5	55 [1.94]
16 [0.630]	12	9.5	M5	19.8	6	32	—	54	42	11	10	5.5	3.6	4.5	71 [2.50]
20 [0.787]	12(18)	9.5	M5	24	6	36	24	58	46	15	10	5.5	3.6	4.5	101 [3.56] (105 [3.70])
25 [0.984]	14(22)	10.5	M6	28	8	42	28	68	54	17	11	6.6	4.3	5.5	160 [5.64] (165 [5.82])
32 [1.260]	14(25)	10.5	M6	34	8	48	34	72	58	22	11	6.6	4.3	5.5	186 [6.56] (196 [6.91])
40 [1.575]	20(30)	14	M8	40	8	58	40	84	68	28	15	9	5.3	6.6	335 [11.82] (351 [12.38])
50 [1.969]	20(35)	14	M8	48	8	66	40	102	82	38	15	9	5.3	9	447 [15.77] (471 [16.61])
63 [2.480]	20(35)	14	M8	60	8	78	50	116	96	40	15	9	5.3	9	591 [20.85] (615 [21.69])
80 [3.150]	25	21	M12	74	12	100	70	142	118	45	22	14	7.3	11	1414 [49.88]
100 [3.940]	30	21	M14	90	20	116	80	170	142	55	23	16	15.2	14	2606 [91.92]

Remark: Figures in parentheses ( ) are for square rod cylinders.

Dimensions of Clevis Mounting Bracket (mm)

CAD φ12～φ40：CDA-OP5, φ50～φ100：CDA-OP6

● φ12～φ40

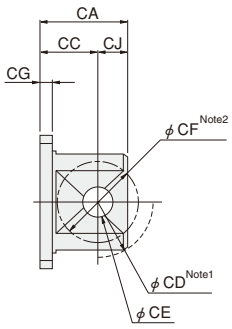

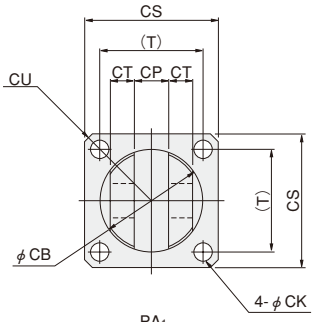

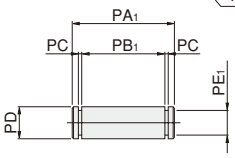

(Two snap rings supplied)

●Mounting screw For φ12～φ100

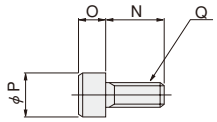

● φ50～φ100

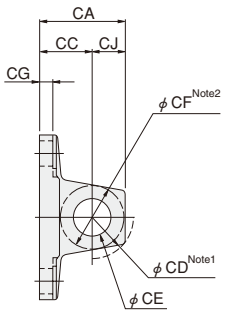

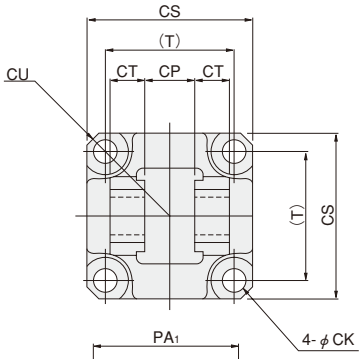

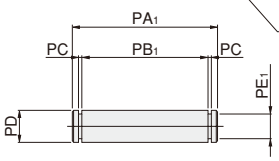

(Two snap rings supplied)

Material: Steel

Bore mm [in.] \ Code	N	O	P	Q	T	CA	CB	CC	CD	CE	CF	CG	CJ	CK	CP	CS	CT	CU	PA1	PB1	PC	PD	PE1	Mass g [oz.]
12 [0.472]	12	5	8.5	M5	16.3	15	12	11	R 7.5	$4^{+0.03}_{0}$	R5	4	4	5.5	$4^{+0.2}_{+0.1}$	25	3	R16	15	10.6	0.7	4f8	2.5	30 [1.06]
16 [0.630]	12	5	8.5	M5	19.8	17	16	12	R10	$5^{+0.03}_{0}$	R6	4	5	5.5	$5^{+0.2}_{+0.1}$	29	3.5	R19	17	12.6	0.7	5f8	3	40 [1.41]
20 [0.787]	12	5	8.5	M5	24	25	22	17	R14	$8^{+0.04}_{0}$	R11	4	8	5.5	$8^{+0.4}_{+0.2}$	34	5.2	R22	24.4	19.6	0.9	8f8	6	75 [2.65]
25 [0.984]	16	6	10	M6	28	25	26	17	R16	$8^{+0.04}_{0}$	R11	4	8	6.6	$8^{+0.4}_{+0.2}$	40	5.2	R25	24.4	19.6	0.9	8f8	6	100 [3.53]
32 [1.260]	16	6	10	M6	34	29	34	19	R20	$10^{+0.04}_{0}$	R12.5	4	10	6.6	$12^{+0.4}_{+0.2}$	44	8	R29.5	34	29.2	0.9	10f8	8	165 [5.82]
40 [1.575]	20	8	13	M8	40	29	34	19	R20	$10^{+0.04}_{0}$	R12.5	4	10	9	$12^{+0.4}_{+0.2}$	52	8	R35	34	29.2	0.9	10f8	8	200 [7.05]
50 [1.969]	22	8	13	M8	48	32	—	19	R17	$14^{+0.08}_{0}$	R14	5	13	9 Counterbore φ17	$20^{+0.6}_{+0.3}$	63	12.5	R41.5	55	47	1.15	$14^{-0.030}_{-0.070}$	13.4	315 [11.11]
63 [2.480]	20	8	13	M8	60	32	—	19	R17	$14^{+0.08}_{0}$	R14	6	13	9 Counterbore φ20	$20^{+0.6}_{+0.3}$	76	15	R50.5	60	52	1.15	$14^{-0.030}_{-0.070}$	13.4	495 [17.46]
80 [3.150]	30	12	18	M12	74	52	—	32	R24	$20^{+0.1}_{0}$	R20	7	20	14 Counterbore φ22	$32^{+0.6}_{+0.3}$	95	16	R62.5	74	66	1.35	$20^{-0.040}_{-0.084}$	19	1110 [39.15]
100 [3.940]	30	14	21	M14	90	52	—	32	R24	$20^{+0.1}_{0}$	R21	7	20	16 Counterbore φ26	$32^{+0.6}_{+0.3}$	115	16	R75.5	74	66	1.35	$20^{-0.040}_{-0.084}$	19	1490 [52.56]

Notes: 1. CD = Swing range of clevis mounting bracket itself.
2. CF = Maximum radius of swing for mating bracket.
Remark: φ12～φ50 are mounted with 2 bolts.

JIG CYLINDERS C SERIES SENSOR SWITCHES

Solid State Type, Reed Switch Type

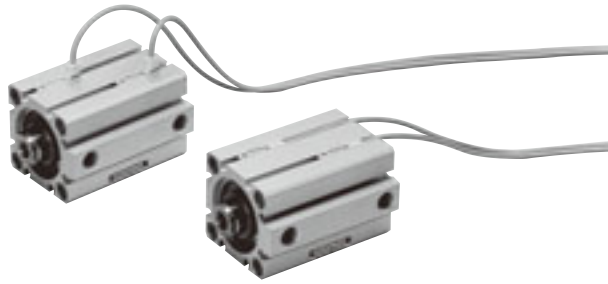

Order Codes

□ □ – CDAS

A —— 1000mm [39in.]
B —— 3000mm [118in.]

ZE135	Solid state type	with indicator lamp	DC10V～28V	Horizontal lead wire
ZE235	Solid state type	with indicator lamp	DC10V～28V	Vertical lead wire
ZE101	Reed switch type	without indicator lamp	DC5V～28V AC85～115V	Horizontal lead wire
ZE201	Reed switch type	without indicator lamp	DC5V～28V AC85～115V	Vertical lead wire
ZE155	Solid state type	with indicator lamp	DC4.5V～28V	Horizontal lead wire
ZE255	Solid state type	with indicator lamp	DC4.5V～28V	Vertical lead wire
ZE102	Reed switch type	with indicator lamp	DC10V～28V AC85～115V	Horizontal lead wire
ZE202	Reed switch type	with indicator lamp	DC10V～28V AC85～115V	Vertical lead wire

●For details of sensor switches, see p.1544.

Moving Sensor Switch

- Loosening mounting screw allows the sensor switch to be moved along the switch mounting groove on the cylinder body.
- Tighten the mounting screw with a tightening torque of 0.1～0.2N·m [0.9～1.8in·lbf].

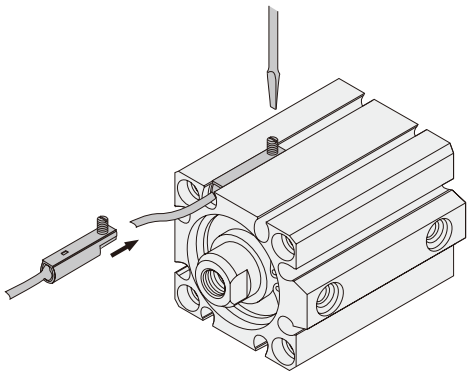

Minimum Cylinder Strokes When Using Sensor Switches

●Solid state type

mm

Bore size	2 pcs. mounting Note		1 pc. mounting
	1-surface mounting	2-surface mounting	
6～12 [0.236～0.472in.]	30	10	5
16～100 [0.630～3.940in.]	10		

Note: Two pieces can be mounted with 5mm stroke.
Take note that overlapping may occur, however.

●Reed switch type

mm

Bore size	2 pcs. mounting		1 pc. mounting
	1-surface mounting	2-surface mounting	
12 [0.472in.]	30	10	10
16～100 [0.630～3.940in.]	10		

Sensor Switch Operating Range, Response Differential, and Maximum Sensing Location

● Operating range : ℓ
The distance the piston travels in one direction, while the switch is in the ON position.

●Response differential : C
The distance between the point where the piston turns the switch ON and the point where the switch is turned OFF as the piston travels in the opposite direction.

●Solid state type

mm [in.]

Item \ Bore	6 [0.236]	8 [0.315]	10 [0.394]	12 [0.472]	16 [0.630]	20 [0.787]	25 [0.984]	32 [1.260]	40 [1.575]	50 [1.969]	63 [2.480]	80 [3.150]	100 [3.940]
Operating range : ℓ	1.8～3.0 [0.071～0.118]	1.8～3.0 [0.071～0.118]	2.0～3.2 [0.079～0.126]	2～4 [0.079～0.157]	2～5 [0.079～0.197]	3.5～7.5 [0.138～0.295]	4～8 [0.157～0.315]	3～7 [0.118～0.276]	3.5～7.5 [0.138～0.295]	3.5～7.5 [0.138～0.295]	4～8.5 [0.157～0.335]	4.5～9.5 [0.177～0.374]	4.5～9.0 [0.177～0.354]
Response differential : C	0.2 [0.008] or less			0.5 [0.02] or less									
Maximum sensing location	6 [0.236]												

Remark: The above table shows reference values.

●Reed switch type

mm [in.]

Item \ Bore	12 [0.472]	16 [0.630]	20 [0.787]	25 [0.984]	32 [1.260]	40 [1.575]	50 [1.969]	63 [2.480]	80 [3.150]	100 [3.940]
Operating range : ℓ	4.5～8.5 [0.177～0.335]	5.5～9.5 [0.217～0.374]	9～13.5 [0.354～0.531]	10～15.5 [0.394～0.610]	8～12 [0.315～0.472]	8.5～14 [0.335～0.551]	9～15 [0.354～0.591]	10～16 [0.394～0.630]	11～16 [0.433～0.630]	11～16.5 [0.433～0.650]
Response differential : C	1.0 [0.039] or less	2.0 [0.079] or less							3.0 [0.118] or less	2.5 [0.098] or less
Maximum sensing location	10 [0.394]									

Remark: The above table shows reference values.

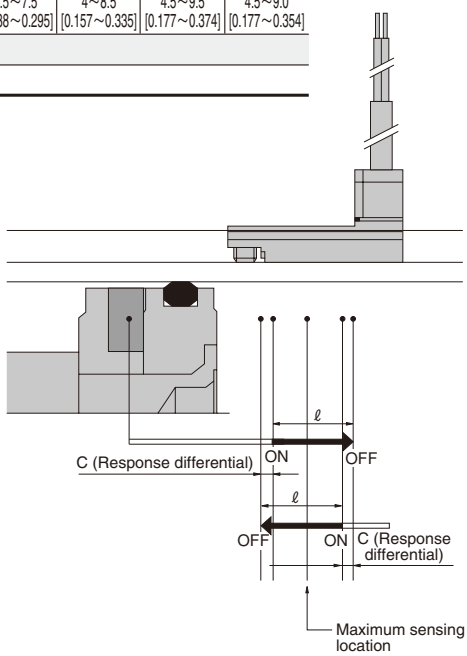

Mounting Sensor Switch

● ϕ6～ϕ12

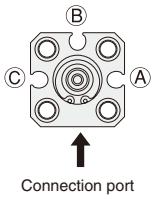

The standard mounting positions at shipping for the end of stroke detection on the rod side is either surface Ⓐ or surface Ⓒ, while the end of stroke detection on the head side is surface Ⓑ.
If mounting sensor switches on the same surface for detection of both ends is required, consult us.
(The sensor switch may sometimes protrude from the cylinder body.)

● ϕ16

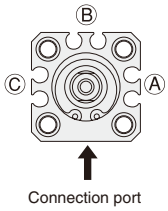

Mounting on any of surfaces Ⓐ, Ⓑ, or Ⓒ allows detection of the end of stroke on the rod side and head side.
(The sensor switch may sometimes protrude from the cylinder body.)

● ϕ20～ϕ100

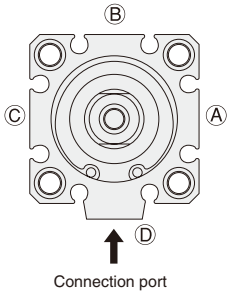

● The drawing is for ϕ 32.

Mounting on any of surfaces Ⓐ, Ⓑ, Ⓒ, or Ⓓ allows detection of the end of stroke on the rod side and head side.
(The sensor switch may sometimes protrude from the cylinder body.)
However, the **ZE2**□□ sensor switches cannot be mounted on the Ⓓ position in ϕ 32, ϕ 40, and ϕ 50.

Mounting Location of End of Stroke Detection Sensor Switch

When the sensor switch is mounted in the position shown in the diagram below (figures in the tables are reference values), the magnet reaches the sensor switch's maximum sensing location at the end of the stroke.

●Standard cylinder, Non-rotating cylinder

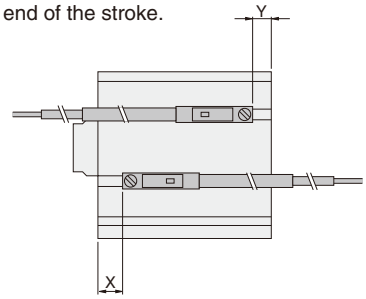

■Solid state type

●Double acting type

mm [in.]

Code	Bore	6	8	10	12	16	20	25	32	40	50	63	80	100
X	Standard type	7.2 [0.283]	8 [0.315]	8.3 [0.327]	7 [0.276]	7 [0.276]	11 [0.433]	11 [0.433]	13.5 [0.531]	14.5 [0.571]	12.5 [0.492]	15 [0.591]	20 [0.787]	25 [0.984]
	With bumper (-R)	—	—	—	10 [0.394]	10 [0.394]	15 [0.591]	16 [0.630]	15.5 [0.610]	16.5 [0.650]	15.5 [0.610]	15 [0.591]	20 [0.787]	25 [0.984]
Y	Standard type	1 [0.039]	0.3 [0.012]	1 [0.039]	4 [0.157]	4 [0.157]	7.5 [0.295]	9 [0.354]	8.5 [0.335]	10.5 [0.413]	14.5 [0.571]	16 [0.630]	20 [0.787]	25 [0.984]
	With bumper (-R)	—	—	—	6 [0.236]	6 [0.236]	8.5 [0.335]	9 [0.354]	6.5 [0.256]	8.5 [0.335]	11.5 [0.453]	16 [0.630]	20 [0.787]	25 [0.984]

●Single acting push type

mm [in.]

Code \ Bore	6	8	10	12	16	20	25	32	40	50
X	17.2 [0.677]	18 [0.709]	18.3 [0.720]	15 [0.591]	15 [0.591]	14 [0.551]	14.5 [0.571]	15.5 [0.610]	17.5 [0.689]	17 [0.669]
Y	1 [0.039]	0.3 [0.012]	1 [0.039]	1 [0.039]	1 [0.039]	4.5 [0.177]	5.5 [0.217]	6.5 [0.256]	7.5 [0.295]	10.5 [0.413]

●Single acting pull type

mm [in.]

Code \ Bore	6	8	10	12	16	20	25	32	40	50
X	7.2 [0.283]	8 [0.315]	8.3 [0.327]	7 [0.276]	7 [0.276]	11 [0.433]	11 [0.433]	13.5 [0.531]	14.5 [0.571]	12.5 [0.492]
Y	11 [0.433]	10.3 [0.406]	11 [0.433]	9 [0.354]	9 [0.354]	12.5 [0.492]	14 [0.551]	13.5 [0.531]	15.5 [0.610]	14.5 [0.571]

■Reed switch type

●Double acting type

mm [in.]

Code	Bore	12	16	20	25	32	40	50	63	80	100
X	Standard type	2.5 [0.098]	2.5 [0.098]	6.5 [0.256]	6.5 [0.256]	9 [0.354]	10 [0.394]	8 [0.315]	10.5 [0.413]	15.5 [0.610]	20.5 [0.807]
	With bumper (-R)	5.5 [0.217]	5.5 [0.217]	10.5 [0.413]	11.5 [0.453]	11 [0.433]	12 [0.472]	11 [0.433]	10.5 [0.413]	15.5 [0.610]	20.5 [0.807]
Y	Standard type	−0.5 [−0.020]	−0.5 [−0.020]	3 [0.118]	4.5 [0.177]	4 [0.157]	6 [0.236]	10 [0.394]	11.5 [0.453]	15.5 [0.610]	20.5 [0.807]
	With bumper (-R)	1.5 [0.059]	1.5 [0.059]	4 [0.157]	4.5 [0.177]	2 [0.079]	4 [0.157]	7 [0.276]	11.5 [0.453]	15.5 [0.610]	20.5 [0.807]

●Single acting push type

mm [in.]

Code \ Bore	12	16	20	25	32	40	50
X	10.5 [0.413]	10.5 [0.413]	9.5 [0.374]	10 [0.394]	11 [0.433]	13 [0.512]	12.5 [0.492]
Y	−3.5 [−0.138]	−3.5 [−0.138]	0 [0]	1 [0.039]	2 [0.079]	3 [0.118]	6 [0.236]

●Single acting pull type

mm [in.]

Code \ Bore	12	16	20	25	32	40	50
X	2.5 [0.098]	2.5 [0.098]	6.5 [0.256]	6.5 [0.256]	9 [0.354]	10 [0.394]	8 [0.315]
Y	4.5 [0.177]	4.5 [0.177]	8 [0.315]	9.5 [0.374]	9 [0.354]	11 [0.433]	10 [0.394]

● Square rod cylinders with magnet

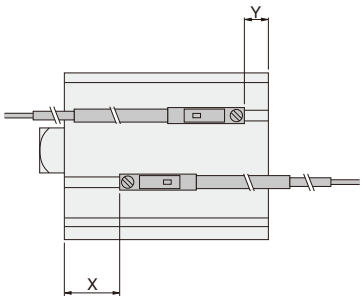

■ Solid state type

● Double acting type

mm [in.]

Code	Bore	20	25	32	40	50	63
X	Standard type	17.5 [0.689]	17.5 [0.689]	22.5 [0.886]	24.5 [0.965]	27.5 [1.083]	30 [1.181]
	With bumper (-R)	21.5 [0.846]	22.5 [0.886]	24.5 [0.965]	26.5 [1.043]	30.5 [1.201]	30 [1.181]
Y	Standard type	10 [0.394]	9 [0.354]	14 [0.551]	14.5 [0.571]	14.5 [0.571]	16 [0.630]
	With bumper (-R)	8.5 [0.335]	9 [0.354]	6.5 [0.256]	8.5 [0.335]	11.5 [0.453]	16 [0.630]

■ Reed switch type

● Double acting type

mm [in.]

Code	Bore	20	25	32	40	50	63
X	Standard type	13 [0.512]	13 [0.512]	18 [0.709]	20 [0.787]	23 [0.906]	25.5 [1.004]
	With bumper (-R)	17 [0.669]	18 [0.709]	20 [0.787]	22 [0.866]	26 [1.024]	25.5 [1.004]
Y	Standard type	5 [0.197]	4.5 [0.177]	4 [0.157]	6 [0.236]	10 [0.394]	11.5 [0.453]
	With bumper (-R)	4 [0.157]	4.5 [0.177]	2 [0.079]	4 [0.157]	7 [0.276]	11.5 [0.453]

● Double rod cylinders with magnet

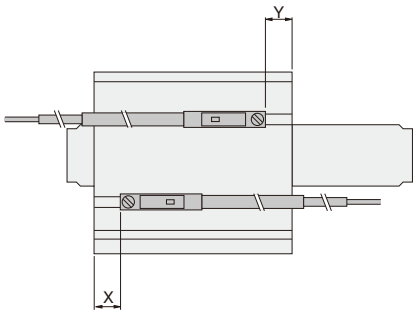

■ Solid state type

● Double acting type

mm [in.]

Code	Bore	6	8	10	12	16	20	25	32	40	50	63	80	100
X	Standard type	7.2 [0.283]	8 [0.315]	8.3 [0.327]	7 [0.276]	7 [0.276]	11 [0.433]	11 [0.433]	13.5 [0.531]	14.5 [0.571]	12.5 [0.492]	15.5 [0.610]	20.5 [0.807]	25 [0.984]
	With bumper (-R)	—	—	—	10 [0.394]	10 [0.394]	15 [0.591]	16 [0.630]	15.5 [0.610]	16.5 [0.650]	14 [0.551]	15 [0.591]	20.5 [0.807]	25 [0.984]
Y	Standard type	5.5 [0.217]	5.8 [0.228]	6 [0.236]	10 [0.394]	10 [0.394]	14 [0.551]	14.5 [0.571]	15.5 [0.610]	17.5 [0.689]	16.5 [0.650]	18 [0.709]	26.5 [1.043]	31.5 [1.240]
	With bumper (-R)	—	—	—	12 [0.472]	12 [0.472]	15 [0.591]	14.5 [0.571]	6.5 [0.256]	15.5 [0.610]	15 [0.591]	18 [0.709]	26.5 [1.043]	31.5 [1.240]

● Single acting type

mm [in.]

Code	Bore	12	16	20	25	32	40	50
X		15 [0.591]	15 [0.591]	14 [0.551]	14.5 [0.571]	15.5 [0.610]	17.5 [0.689]	16.5 [0.650]
Y		7 [0.276]	7 [0.276]	11 [0.433]	11 [0.433]	13.5 [0.531]	14.5 [0.571]	12.5 [0.492]

■ Reed switch type

● Double acting type

mm [in.]

Code	Bore	12	16	20	25	32	40	50	63	80	100
X	Standard type	2.5 [0.098]	2.5 [0.098]	6.5 [0.256]	6.5 [0.256]	9 [0.354]	10 [0.394]	8 [0.315]	10.5 [0.413]	16 [0.630]	20.5 [0.807]
	With bumper (-R)	5.5 [0.217]	5.5 [0.217]	10.5 [0.413]	11.5 [0.453]	11 [0.433]	12 [0.472]	9.5 [0.374]	10.5 [0.413]	16 [0.630]	20.5 [0.807]
Y	Standard type	5.5 [0.217]	5.5 [0.217]	9.5 [0.374]	10 [0.394]	11 [0.433]	13 [0.512]	12 [0.472]	13.5 [0.531]	22 [0.866]	27 [1.063]
	With bumper (-R)	7.5 [0.295]	7.5 [0.295]	10.5 [0.413]	10 [0.394]	2 [0.079]	11 [0.433]	10.5 [0.413]	13.5 [0.531]	22 [0.866]	27 [1.063]

● Single acting type

mm [in.]

Code	Bore	12	16	20	25	32	40	50
X		10.5 [0.413]	10.5 [0.413]	9.5 [0.374]	10 [0.394]	11 [0.433]	13 [0.512]	12 [0.472]
Y		2.5 [0.098]	2.5 [0.098]	6.5 [0.256]	6.5 [0.256]	9 [0.354]	10 [0.394]	8 [0.315]

●Tandem cylinders with magnet

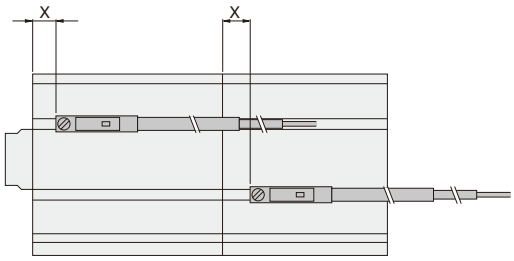

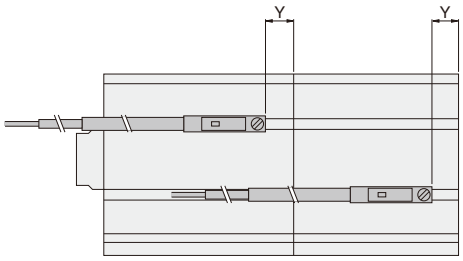

■Solid state type

●Double acting type

mm [in.]

Code \ Bore		12	16	20	25	32	40	50	63	80	100
X	Standard type	7 [0.276]	7 [0.276]	11 [0.433]	11 [0.433]	13.5 [0.531]	14.5 [0.571]	12.5 [0.492]	15 [0.591]	20 [0.787]	25 [0.984]
	With bumper (-R)	10 [0.394]	10 [0.394]	15 [0.591]	16 [0.630]	15.5 [0.610]	16.5 [0.650]	15.5 [0.610]	15 [0.591]	20 [0.787]	25 [0.984]
Y	Standard type	4 [0.157]	4 [0.157]	7.5 [0.295]	9 [0.354]	8.5 [0.335]	10.5 [0.413]	14.5 [0.571]	16 [0.630]	20 [0.787]	25 [0.984]
	With bumper (-R)	6 [0.236]	6 [0.236]	8.5 [0.335]	9 [0.354]	6.5 [0.256]	8.5 [0.335]	11.5 [0.453]	16 [0.630]	20 [0.787]	25 [0.984]

●Single acting push type

mm [in.]

Code \ Bore	12	16	20	25	32	40	50
X	15 [0.591]	15 [0.591]	14 [0.551]	14.5 [0.571]	15.5 [0.610]	17.5 [0.689]	16.5 [0.650]
Y	1 [0.039]	1 [0.039]	4.5 [0.177]	5.5 [0.217]	6.5 [0.256]	7.5 [0.295]	10.5 [0.413]

■Reed switch type

●Double acting type

mm [in.]

Code \ Bore		12	16	20	25	32	40	50	63	80	100
X	Standard type	2.5 [0.098]	2.5 [0.098]	6.5 [0.256]	6.5 [0.256]	9 [0.354]	10 [0.394]	8 [0.315]	10.5 [0.413]	15.5 [0.610]	20.5 [0.807]
	With bumper (-R)	5.5 [0.217]	5.5 [0.217]	10.5 [0.413]	11.5 [0.453]	11 [0.433]	12 [0.472]	11 [0.433]	10.5 [0.413]	15.5 [0.610]	20.5 [0.807]
Y	Standard type	−0.5 [−0.020]	−0.5 [−0.020]	3 [0.118]	4.5 [0.177]	4 [0.157]	6 [0.236]	10 [0.394]	11.5 [0.453]	15.5 [0.610]	20.5 [0.807]
	With bumper (-R)	1.5 [0.059]	1.5 [0.059]	4 [0.157]	4.5 [0.177]	2 [0.079]	4 [0.157]	7 [0.276]	11.5 [0.453]	15.5 [0.610]	20.5 [0.807]

●Single acting push type

mm [in.]

Code \ Bore	12	16	20	25	32	40	50
X	10.5 [0.413]	10.5 [0.413]	9.5 [0.374]	10 [0.394]	11 [0.433]	13 [0.512]	12 [0.472]
Y	−3.5 [−0.138]	−3.5 [−0.138]	0 [0]	1 [0.039]	2 [0.079]	3 [0.118]	6 [0.236]

●Dual stroke cylinders with magnet

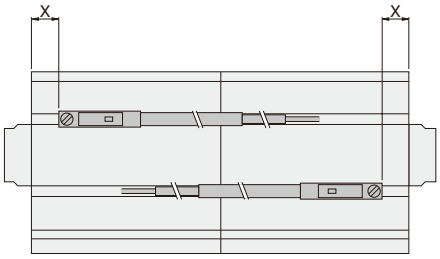

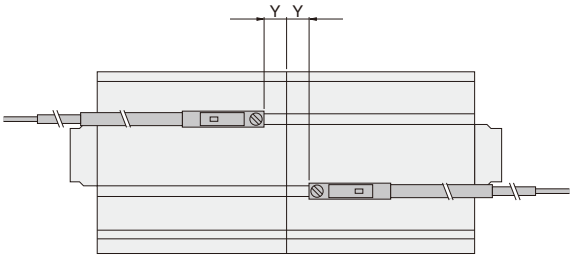

■Solid state type

●Double acting type

mm [in.]

Code	Bore	12	16	20	25	32	40	50	63	80	100
X	Standard type	7 [0.276]	7 [0.276]	11 [0.433]	11 [0.433]	13.5 [0.531]	14.5 [0.571]	12.5 [0.492]	15 [0.591]	20 [0.787]	25 [0.984]
	With bumper (-R)	10 [0.394]	10 [0.394]	15 [0.591]	16 [0.630]	15.5 [0.610]	16.5 [0.650]	14 [0.551]	15 [0.591]	20 [0.787]	25 [0.984]
Y	Standard type	4 [0.157]	4 [0.157]	7.5 [0.295]	9 [0.354]	8.5 [0.335]	10.5 [0.413]	14.5 [0.571]	16 [0.630]	20 [0.787]	25 [0.984]
	With bumper (-R)	6 [0.236]	6 [0.236]	8.5 [0.335]	9 [0.354]	6.5 [0.256]	8.5 [0.335]	13.5 [0.531]	16 [0.630]	20 [0.787]	25 [0.984]

●Single acting push type

mm [in.]

Code \ Bore	12	16	20	25	32	40	50
X	15 [0.591]	15 [0.591]	14 [0.551]	14.5 [0.571]	15.5 [0.610]	17.5 [0.689]	16.5 [0.650]
Y	1 [0.039]	1 [0.039]	7.5 [0.295]	5.5 [0.217]	6.5 [0.256]	7.5 [0.295]	10.5 [0.413]

●Single acting pull type

mm [in.]

Code \ Bore	12	16	20	25	32	40	50
X	7 [0.276]	7 [0.276]	11 [0.433]	11 [0.433]	13.5 [0.531]	14.5 [0.571]	12.5 [0.492]
Y	9 [0.354]	9 [0.354]	12.5 [0.492]	14 [0.551]	13.5 [0.531]	15.5 [0.610]	14.5 [0.571]

■Reed switch type

●Double acting type

mm [in.]

Code	Bore	12	16	20	25	32	40	50	63	80	100
X	Standard type	2.5 [0.098]	2.5 [0.098]	6.5 [0.256]	6.5 [0.256]	9 [0.354]	10 [0.394]	8 [0.315]	10.5 [0.413]	15.5 [0.610]	20.5 [0.807]
	With bumper (-R)	5.5 [0.217]	5.5 [0.217]	10.5 [0.413]	11.5 [0.453]	11 [0.433]	12 [0.472]	9.5 [0.374]	10.5 [0.413]	15.5 [0.610]	20.5 [0.807]
Y	Standard type	−0.5 [−0.020]	−0.5 [−0.020]	3 [0.118]	4.5 [0.177]	4 [0.157]	6 [0.236]	10 [0.394]	11.5 [0.453]	15.5 [0.610]	20.5 [0.807]
	With bumper (-R)	1.5 [0.059]	1.5 [0.059]	4 [0.157]	4.5 [0.177]	2 [0.079]	4 [0.157]	9 [0.354]	11.5 [0.453]	15.5 [0.610]	20.5 [0.807]

●Single acting push type

mm [in.]

Code \ Bore	12	16	20	25	32	40	50
X	10.5 [0.413]	10.5 [0.413]	9.5 [0.374]	10 [0.394]	11 [0.433]	13 [0.512]	12 [0.472]
Y	−3.5 [−0.138]	−3.5 [−0.138]	3 [0.118]	1 [0.039]	2 [0.079]	3 [0.118]	6 [0.236]

●Single acting pull type

mm [in.]

Code \ Bore	12	16	20	25	32	40	50
X	2.5 [0.098]	2.5 [0.098]	6.5 [0.256]	6.5 [0.256]	9 [0.354]	10 [0.394]	8 [0.315]
Y	4.5 [0.177]	4.5 [0.177]	8 [0.315]	9.5 [0.374]	9 [0.354]	11 [0.433]	10 [0.394]

●Lateral load resistant cylinders with magnet

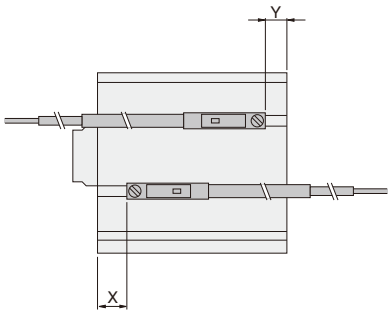

■Solid state type

●Double acting type

mm [in.]

Code \ Bore	12	16	20	25	32	40	50	63	80	100
X	10 [0.394]	10 [0.394]	15 [0.591]	16 [0.630]	15.5 [0.610]	16.5 [0.650]	15.5 [0.610]	17.5 [0.689]	26.5 [1.043]	31.5 [1.240]
Y	6 [0.236]	6 [0.236]	8.5 [0.335]	9 [0.354]	6.5 [0.256]	8.5 [0.335]	11.5 [0.453]	13.5 [0.531]	18.5 [0.728]	23.5 [0.925]

■Reed switch type

●Double acting type

mm [in.]

Code \ Bore	12	16	20	25	32	40	50	63	80	100
X	5.5 [0.217]	5.5 [0.217]	10.5 [0.413]	11.5 [0.453]	11 [0.433]	12 [0.472]	11 [0.433]	13 [0.512]	22 [0.866]	27 [1.063]
Y	1.5 [0.059]	1.5 [0.059]	4 [0.157]	4.5 [0.177]	2 [0.079]	4 [0.157]	7 [0.276]	9 [0.354]	14 [0.551]	19 [0.748]

●Long stroke cylinders with magnet

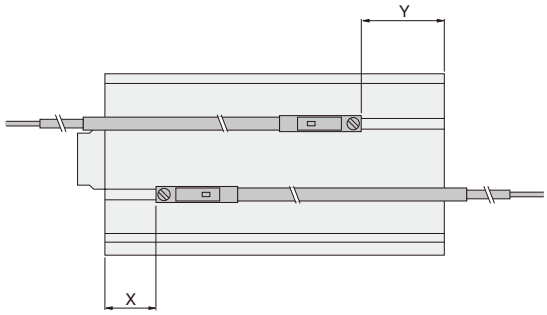

■Solid state type

●Double acting type

mm [in.]

Code \ Bore	12	16	20	25	32	40	50	63	80	100
X	15 [0.591]	15 [0.591]	20 [0.787]	21 [0.827]	20.5 [0.807]	21.5 [0.846]	20.5 [0.807]	22.5 [0.886]	31.5 [1.240]	36.5 [1.437]
Y	12 [0.472]	12 [0.472]	15 [0.591]	14.5 [0.571]	13.5 [0.531]	15.5 [0.610]	12.5 [0.492]	13.5 [0.531]	18.5 [0.728]	23.5 [0.925]

■Reed switch type

●Double acting type

mm [in.]

Code \ Bore	12	16	20	25	32	40	50	63	80	100
X	10.5 [0.413]	10.5 [0.413]	15.5 [0.610]	16.5 [0.650]	16 [0.630]	17 [0.669]	16 [0.630]	18 [0.709]	27 [1.063]	32 [1.260]
Y	7.5 [0.295]	7.5 [0.295]	10.5 [0.413]	10 [0.394]	9 [0.354]	11 [0.433]	8 [0.315]	9 [0.354]	14 [0.551]	19 [0.748]

●End keep cylinder with magnet

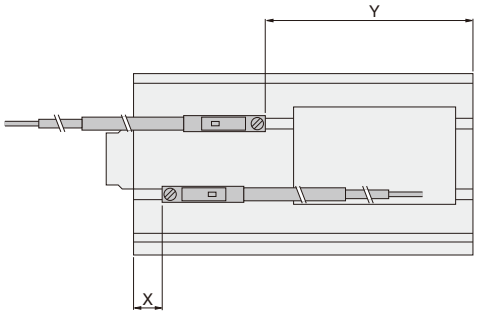

■Solid state type

●Head side end keep

mm [in.]

Code \ Bore	16	20	25	32	40	50	63
X	15.5 [0.610]	20.5 [0.807]	21.5 [0.846]	20.5 [0.807]	21.5 [0.846]	20.5 [0.807]	22.5 [0.886]
Y	36.5 [1.437]	34.5 [1.358]	34.5 [1.358]	43.5 [1.713]	45.5 [1.791]	51.5 [2.028]	54.5 [2.146]

■Solid state type

●Rod side end keep

mm [in.]

Code \ Bore	16	20	25	32	40	50	63
X	35.5 [1.398]	35.5 [1.398]	36.5 [1.437]	45.5 [1.791]	46.5 [1.831]	55.5 [2.185]	57.5 [2.264]
Y	11.5 [0.453]	14.5 [0.571]	14.5 [0.571]	13.5 [0.531]	15.5 [0.610]	11.5 [0.453]	13.5 [0.531]

■Reed switch type

●Head side end keep

mm [in.]

Code \ Bore	16	20	25	32	40	50	63
X	11 [0.433]	16 [0.630]	17 [0.669]	16 [0.630]	17 [0.669]	16 [0.630]	16 [0.630]
Y	32 [1.260]	30 [1.181]	30 [1.181]	39 [1.535]	41 [1.614]	47 [1.850]	50 [1.969]

■Reed switch type

●Rod side end keep

mm [in.]

Code \ Bore	16	20	25	32	40	50	63
X	31 [1.220]	31 [1.220]	32 [1.260]	41 [1.614]	42 [1.654]	51 [2.008]	53 [2.087]
Y	7 [0.276]	10 [0.394]	10 [0.394]	9 [0.354]	11 [0.433]	7 [0.276]	9 [0.354]

Body mounting

Jig cylinder mounting holes include both through holes with female mounting thread, and dedicated female mounting threads, for a variety of mountings. For details, see the diagrams below.

■Standard cylinders, Double rod cylinders

●Standard cylinders ●Double rod cylinders ●Lateral load resistant cylinders
●Long stroke cylinders ●End keep cylinders

●φ6～φ12 ●φ16 ●φ20, φ25 ●φ32～φ100

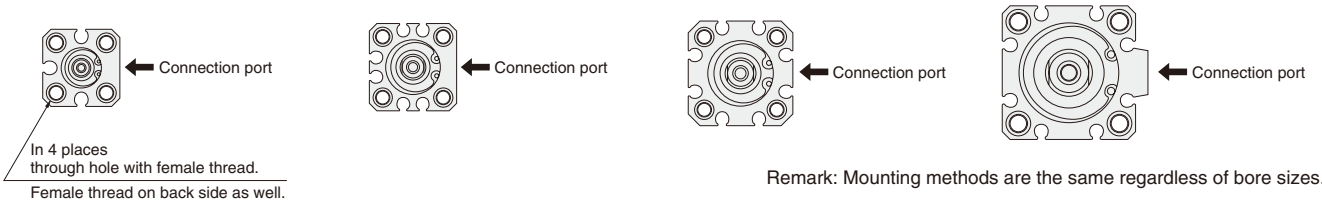

Remark: Mounting methods are the same regardless of bore sizes.

■Non-rotating cylinders

●φ6, φ8, φ10

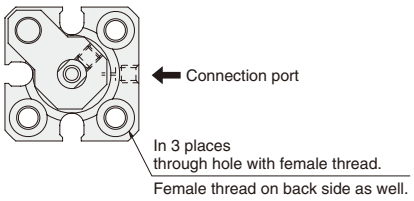

■Square rod cylinders

●φ20, φ25 ●φ32～φ63

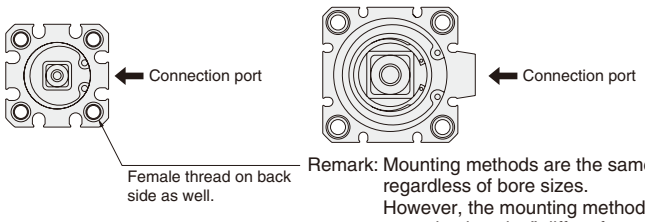

Remark: Mounting methods are the same regardless of bore sizes.
However, the mounting method for "with centering location" differs from the figure above. See p.153.

■Tandem cylinders

●φ12 ●φ16 ●φ20, φ25 ●φ32～φ100

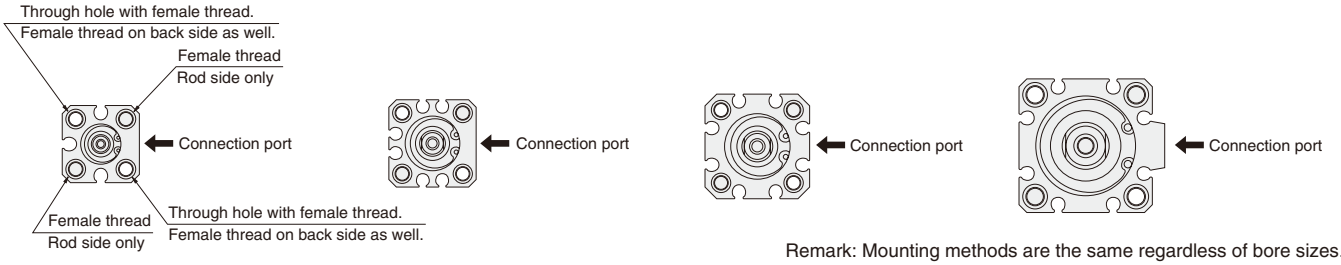

Remark: Mounting methods are the same regardless of bore sizes.

■Dual stroke cylinders

●φ12 ●φ16 ●φ20, φ25 ●φ32～φ100

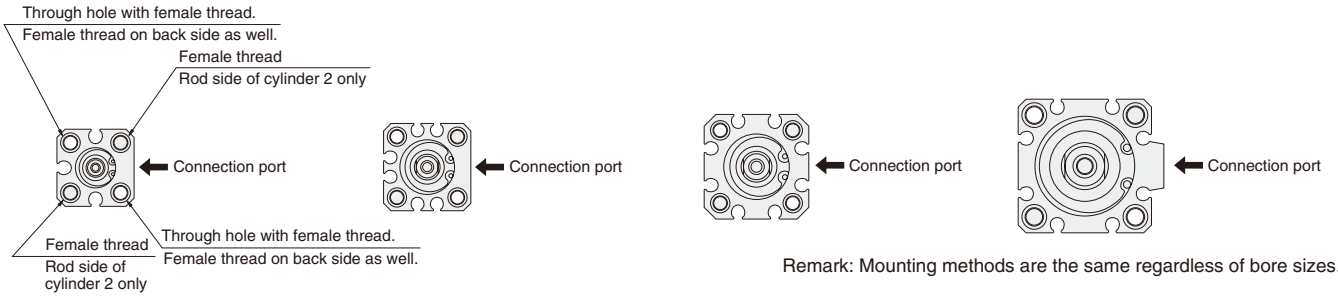

Remark: Mounting methods are the same regardless of bore sizes.

Notes: 1. Avoid applying lateral loads on the piston rod, with the exception of Lateral load resistant cylinders, Long stroke cylinders, and End keep cylinders.
2. When using through holes for mounting, always use the supplied dedicated washers. (except φ6, φ8, and φ10)
3. Mount an external stopper, etc., to prevent the cylinder from being subjected to direct shocks during operation.

● Always use the supplied dedicated washer whenever using a through bolt to directly mount the cylinder body in place.※ Use the bolts shown in the table below to mount in place.
And for bolts used for direct mounting, see p.209.

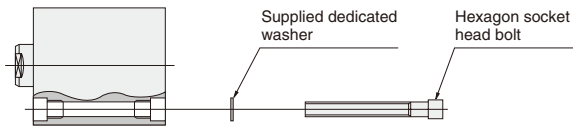

※Washer not available for bore sizes φ6, φ8, and φ10.

Bore size mm [in.]	6 [0.236]	8 [0.315]	10 [0.394]	12 [0.472]	16 [0.630]	20 [0.787]	25 [0.984]	32 [1.260]	40 [1.575]	50 [1.969]	63 [2.480]	80 [3.150]	100 [3.940]
Hexagon socket head bolt nominal size	M3	M3	M3	M3	M3	M3	M4	M4	M5	M6	M6	M8	M10

●Tightening thread of the end of piston rod

Since a tool (thin wrench) has been prepared for holding the piston rod when tightening the rod end thread, consult us.

Order code: L115069

Bracket mounting

- Foot mounting brackets cannot be installed on tandem cylinders and dual stroke cylinders.
- Flange mounting brackets cannot be installed on the head side of tandem cylinders and the stroke 1 side of dual stroke cylinders.
- Clevis mounting brackets cannot be installed on anything except for lateral load resistant cylinders, long stroke cylinders, and end keep cylinders.

Non-standard stroke

- In most cases, body cutting is used for the manufacturing for non-standard strokes.
  However, body cutting is not used for strokes of less than 5mm for ϕ 12 [0.472in.]～ϕ40 [1.575in.], and strokes of less than 10mm for ϕ50 [1.969in.]～ϕ100 [3.940in.]. The collar packed is used for these cases. Moreover, sizes ϕ6 [0.236in.] ～ϕ10 [0.394in.] are collar packed only. For delivery, consult us.
  Rod side end keep cylinders cannot be collar packed.
- Dimensions

1. Additional strokes obtained by body cutting remain classed as non-standard strokes.
2. Additional strokes obtained by collar packed are classed as standard strokes in the longer one.

Lateral Load

- Keep the lateral load on the rod end of the lateral load resistant cylinder, long stroke cylinder, and end keep cylinder, at or below the values shown in the graphs below.
  Note: Avoid applying lateral load on any cylinder types other than the lateral load resistant cylinder, long stroke cylinder, and end keep cylinder.

●Lateral load resistant cylinders

● Standard type (CBDA)

● ϕ 12 [0.472in.]～ϕ 20 [0.787in.]

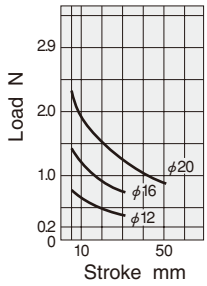

● ϕ 25 [0.984in.]～ϕ 40 [1.575in.]

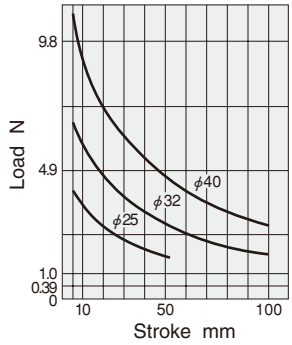

● ϕ 50 [1.969in.]～ϕ 100 [3.940in.]

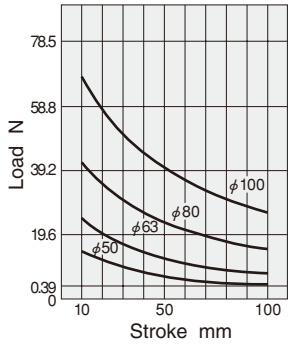

1N = 0.2248lbf.
1mm = 0.0394in.

● Cylinder with magnet (CBDAS)

● ϕ 12 [0.472in.]～ϕ 20 [0.787in.]

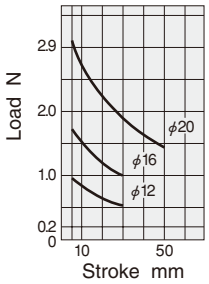

● ϕ 25 [0.984in.]～ϕ 50 [1.969in.]

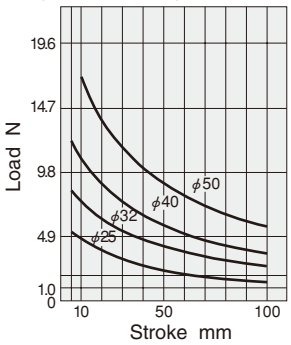

● ϕ 63 [2.480in.]～ϕ 100 [3.940in.]

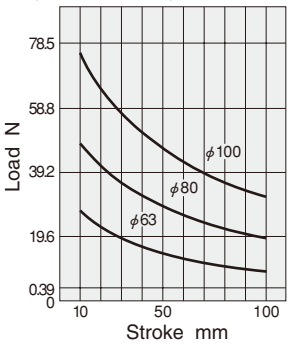

1N = 0.2248lbf.
1mm = 0.0394in.

●Long stroke cylinders, End keep cylinders

●Standard type (CCDA,CCDAK)

● ϕ 12 [0.472in.]～ϕ 20 [0.787in.]

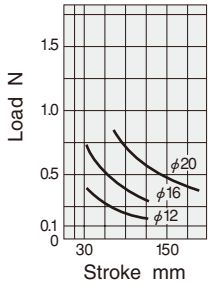

● ϕ 25 [0.984in.]～ϕ 50 [1.969in.]

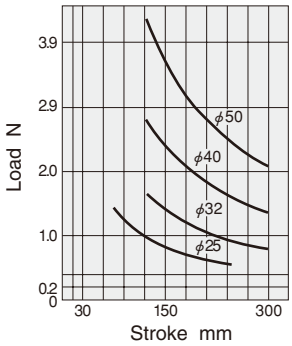

● ϕ 63 [2.480in.]～ϕ 100 [3.940in.]

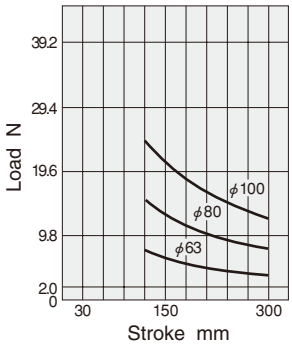

1N = 0.2248lbf.
1mm = 0.0394in.

●Cylinder with magnet (CCDAS, CCDAKS)

● ϕ 12 [0.472in.]～ϕ 20 [0.787in.]

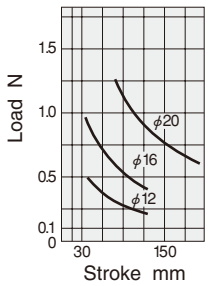

● ϕ 25 [0.984in.]～ϕ 40 [1.575in.]

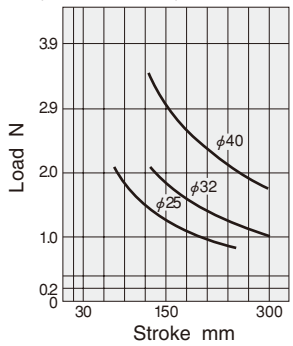

● ϕ 50 [1.969in.]～ϕ 100 [3.940in.]

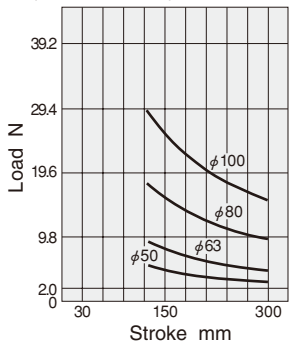

1N = 0.2248lbf.
1mm = 0.0394in.

Single acting cylinders

Standard cylinders single acting push type
Standard cylinders single acting pull type
Double rod cylinders single acting type
Tandem cylinders single acting push type
Dual stroke cylinders single acting push type
Dual stroke cylinders single acting pull type

If in the above types' application, air is being continuously applied from a connection port, and the spring remains in a compressed state for long periods of time, the piston may sometimes fail to return to its original position even after the air is exhausted. If equipment is to be used in this way over long periods of time, consult us.

End keep cylinder

● Control circuit

1. For control of Jig end keep cylinders, we recommend the use of 2-position, 4-, 5-port valves. Avoid the use of a control circuit of ABR connections (exhaust centers) with 3-position valves that exhaust air from 2 ports.
2. Always use meter-out control for speed control. Meter-in control may result in failure of the locking mechanism to release.

Notes: 1. It is dangerous to supply air to a connection port on a side with a locking mechanism while already exhausted, because the piston rod could suddenly extend (retract). In addition, it could also cause galling of the lock piston and piston rod, resulting in defective operation. Always supply air to the connection port on the opposite side to ensure back pressure is applied.
2. When restarting operations after air has been exhausted from the cylinder due to completion of operations or to an emergency stop, always start by supplying air to the connection port on the opposite side of the locking mechanism.
3. Connect the valve port A (NC) to the connection port on the side with the locking mechanism.

● Manual operation of the locking mechanism

While the locking mechanism is normally released automatically through cylinder operations, it can also be released manually. For manual release, insert an M3 × 0.5 screw that has 30mm [1.18in.] below head length into the manual override opening, thread it in about 3 turns into the internal lock piston, and then pull up the screw. To maintain the manual override for adjustment, etc., thread the locknut onto the screw and, with the locking mechanism in a released state, tighten the locknut against the cylinder.

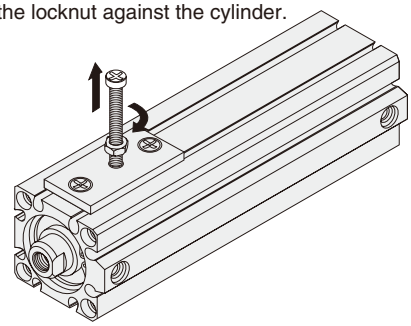

Notes: 1. It is dangerous to release the lock when a load (weight) is present on the piston rod, because it may cause a sudden fall or cause the unintended piston rod's extension (retraction). In this case, always supply air to the connection port opposite the one adjacent to the locking mechanism before releasing the locking mechanism.
2. If the locking mechanism cannot easily be released even with manual override, it could be the result of galling of the lock piston and piston rod. In this case, supply air to the connection port opposite the one adjacent to the locking mechanism before releasing the locking mechanism.
3. Because water, oil, dust, etc., entering via the manual override opening could be a cause of defective locking or other erratic operation, use a cover, etc., for protection when using in locations subject to dripping water, dripping oil, or to large amounts of dust, etc.

Sensor switch

In the standard cylinder, a magnet for the sensor switch is not built-in.
To install a sensor switch, a cylinder with a built-in magnet for the sensor switch is required.

Notes: 1. For the sensor switch mounting location and moving ranges, see p.199.
2. Contact protection measures are required for connecting inductive loads to reed sensor switches or for when capacitive surges are generated. For contact protection measures, see p.1566.

Piping

Always thoroughly blow off (use compressed air) the tubing before connecting it to the cylinder. Entering chips, sealing tape, rust, etc., generated during piping work could result in air leaks or other defective operation.

Atmosphere

1. If using in locations subject to dripping water, dripping oil, etc., or to large amounts of dust, use a cover to protect the unit.
2. The product cannot be used when the media or ambient atmosphere contains any of the substances listed below.
   Organic solvents, phosphate ester type hydraulic oil, sulphur dioxide, chlorine gas, or acids, etc.

Lubrication

The product can be used without lubrication, if lubrication is required, use Turbine Oil Class 1 (**ISO VG32**) or equivalent.
Avoid using spindle oil or machine oil.

OPTIONAL ROD END SHAPE PATTERNS

Use an order form of rod end pattern and fill the items on the selected one from among 22 types of optional patterned shapes to obtain made-to-order cylinders of non-standard rod end shapes. The optional rod end shapes can be applied to the entire Jig Cylinders C Series. For the order form containing the optional patterned shapes, contact us.
(Except ϕ6, ϕ8, ϕ10)

Order Codes

C [ ] [ ] [ ] – [ ] – [ ] – W Remark column [ ]

- Cylinder type
- Cylinder specification
- Bore size × Stroke (For tandem and dual cylinders, use Bore size × Stroke1 × Stroke2)
- Bumper
- Sensor switch model and number
- Rod end shape pattern code

Piston Rod End Shape Pattern Diagrams (22 Types)

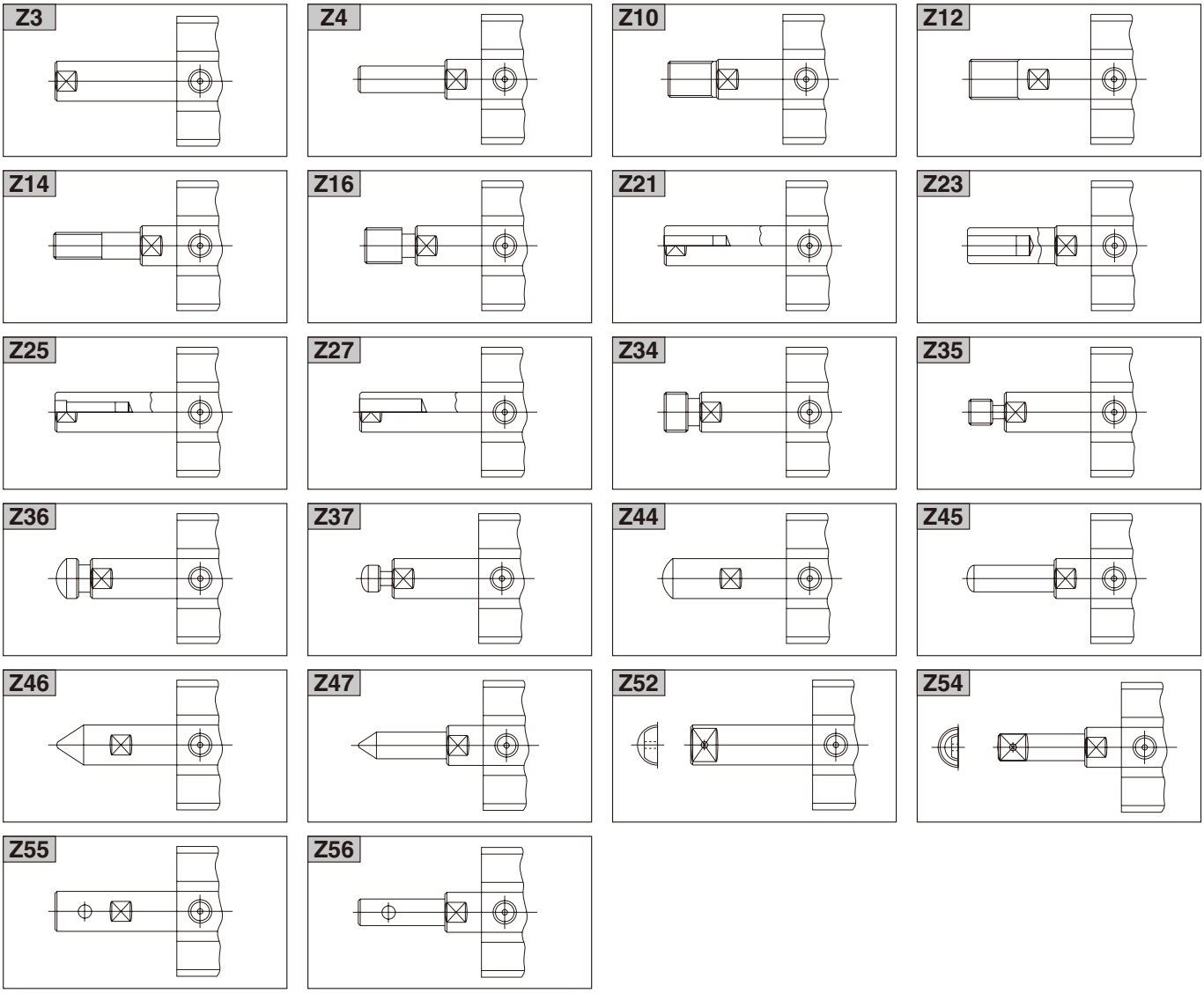

MOUNTING SCREWS FOR JIG CYLINDERS

●Some types of mounting screws specifically for the Jig Cylinders are available.
Use the order codes below to place orders.

List of Order Codes

① Mounting screw type: JIS B 1176 Hexagon socket head cap screws
② Surface treatment: Nickel plated

Applicable cylinder bore size mm [in.]	Mounting screw order code	Screw size	Number of supplied screws
6 [0.236] 8 [0.315] 10 [0.394] 12 [0.472] 16 [0.630] 20 [0.787]	CRK124	M3×25	2
	CRK125	M3×30	
	CRK126	M3×35	
	CRK127	M3×40	
	CRK128	M3×45	
	CRK129	M3×50	
	CRK130	M3×30	4
	CRK131	M3×35	
	CRK132	M3×40	
	CRK133	M3×45	
	CRK134	M3×50	
25 [0.984] 32 [1.260]	CRK135	M4×30	4
	CRK136	M4×35	
	CRK137	M4×40	
	CRK138	M4×45	
	CRK139	M4×50	
	CRK140	M4×55	
	CRK141	M4×60	
	CRK142	M4×65	
	CRK143	M4×70	
	CRK144	M4×75	
40 [1.575]	CRK145	M5×35	4
	CRK146	M5×40	
	CRK147	M5×45	
	CRK148	M5×50	
	CRK149	M5×55	
	CRK150	M5×60	
	CRK151	M5×65	
	CRK152	M5×70	
	CRK153	M5×75	
	CRK154	M5×80	
	CRK155	M5×85	
	CRK156	M5×90	
	CRK157	M5×100	
	CRK158	M5×110	
50 [1.969] 63 [2.480]	CRK159	M6×40	4
	CRK160	M6×45	
	CRK161	M6×50	
	CRK162	M6×55	
	CRK163	M6×60	
	CRK164	M6×65	
	CRK165	M6×70	
	CRK166	M6×75	
	CRK167	M6×80	
	CRK168	M6×85	
	CRK169	M6×90	
	CRK170	M6×100	
	CRK171	M6×110	
	CRK172	M6×120	
	CRK173	M6×130	
	CRK174	M6×140	
	CRK175	M6×150	

Applicable cylinder bore size mm [in.]	Mounting screw order code	Screw size	Number of supplied screws
80 [3.150]	CRK176	M8×60	4
	CRK177	M8×65	
	CRK178	M8×70	
	CRK179	M8×75	
	CRK180	M8×80	
	CRK181	M8×85	
	CRK182	M8×90	
	CRK183	M8×95	
	CRK184	M8×100	
	CRK185	M8×110	
	CRK186	M8×120	
	CRK187	M8×130	
	CRK188	M8×140	
	CRK189	M8×150	
	CRK190	M8×160	
	CRK191	M8×170	
100 [3.940]	CRK192	M10×65	4
	CRK193	M10×70	
	CRK194	M10×75	
	CRK195	M10×80	
	CRK196	M10×85	
	CRK197	M10×90	
	CRK198	M10×95	
	CRK199	M10×100	
	CRK200	M10×110	
	CRK201	M10×120	
	CRK202	M10×130	
	CRK203	M10×140	
	CRK204	M10×150	
	CRK205	M10×160	
	CRK206	M10×170	